Commercial and Industrial Smart Inverter Solutions

ET 40-50kW+Lynx C/BAT Series

User Manual

Copyright Statement:

Copyright © GoodWe Technologies Co., Ltd. 2024. All rights reserved.

No part of this manual can be reproduced or transmitted to the public platform in any form or by any means without the prior written authorization of GoodWe Technologies Co., Ltd.

Trademarks

GOODWE and other GOODWE trademarks are trademarks of GoodWe Technologies Co., Ltd. All other trademarks or registered trademarks mentioned in this manual are owned by GoodWe Technologies Co., Ltd.

NOTICE

The information in this user manual is subject to change due to product updates or other reasons. This guide cannot replace the product labels or the safety precautions in the user manual unless otherwise specified. All descriptions here are for guidance only.

1 About This Manual

1.1 Overview

The energy storage system consists of inverter, battery system, and smart meter. This manual describes the product information, installation, electrical connection, commissioning, troubleshooting and maintenance of the system. Read through this manual before installing and operating the products. This manual is subject to update without notice. For more product details and latest documents, visit https://en.goodwe.com/.

1.2 Applicable Model

The energy storage system consists the following products:

Product type	Product information	Description
Inverter	GW40K-ET-10 GW50K-ET-10	Rated output power: 40kW - 50kW.
Battery	LX C101-10 LX C120-10 LX C138-10 LX C156-10	Capacity of single battery system: 101.38kWh - 156.67kWh. Max capacity of parallel connected battery systems: 468kWh.
	GW100KWH-D-10 GW100KWH-D-10(Extension)	Capacity of single battery system: 100kWh. Max capacity of parallel connected battery systems: 300kWh.
	GW51.2-BAT-I-G10 GW56.3-BAT-I-G10	Capacity of single battery system:51.2/56.3 kWh. Max capacity of parallel connected battery systems: 307.2/337.8 kWh.
Smart meter	GM330	Monitors and detects running data in the system, such as voltage, current, etc. ● GM330 is standard for single inverter system or parallel system with multiple inverters ● GM3000 is optional for single inverter system
	GM3000	

Smart dongle	WiFi/LAN Kit-20	In single inverter system, it uploads the system running information to the monitoring platform through WiFi or LAN.
	Ezlink3000	It connects to the master inverter when multi inverters are parallel connected. Uploads the system running information to the monitoring platform through WiFi or LAN.

1.3 Symbol Definition

DANGER
Indicates a high-level hazard that, if not avoided, will result in death or serious injury.
WARNING
Indicates a medium-level hazard that, if not avoided, could result in death or serious injury.
CAUTION
Indicates a low-level hazard that, if not avoided, could result in minor or moderate injury.
NOTICE
Highlight and supplement the texts. Or some skills and methods to solve product-related problems to save time.

2 Safety Precautions

Please strictly follow these safety instructions in the user manual during the operation.

WARNING
The products are designed and tested strictly to comply with related safety rules. Read and follow all the safety instructions and cautions before any operations. Improper operation might cause personal injury or property damage as the products are electrical equipment.

2.1 General Safety

NOTICE
• The information in this user manual is subject to change due to product updates or other reasons. This guide cannot replace the product labels or the safety precautions in the user manual unless otherwise specified. All descriptions here are for guidance only. • Read through this document before installation to learn about the product and the precautions. • All operations should be performed by trained and knowledgeable technicians who are familiar with local standards and safety regulations. • Use insulating tools and wear personal protective equipment (PPE) when operating the equipment to ensure personal safety. Wear anti-static gloves, cloths, and wrist strips when touching electronic devices to protect the equipment from damage. • Unauthorized dismantling or modification may damage the equipment, the damage is not covered under the warranty. • Strictly follow the installation, operation, and configuration instructions in this guide and relative user manual. The manufacturer shall not be liable for equipment damage or personal injury if you do not follow the instructions. https: //en.goodwe.com/warranty

2.2 Personnel Requirements

NOTICE
• Personnel who install or maintain the equipment must be strictly trained, learn about safety precautions and correct operations. • Only qualified professionals or trained personnel are allowed to install, operate, maintain, and replace the equipment or parts.

2.3 System Installation

DANGER

- Disconnect the upstream and downstream switches to power off the equipment before any electrical connections. Do not work with power on. Otherwise, an electric shock may occur. Do not work with power on. Otherwise, an electric shock may occur.
- Install a breaker at the voltage input side of the equipment to prevent personal injury or equipment damage caused by energized electrical work.
- All operations such as transportation, storage, installation, use and maintenance shall comply with applicable laws, regulations, standards and specifications.
- Perform electrical connections in compliance with local laws, regulations, standards and specifications. Including operations, cables, and component specifications.
- Connect cables using the connectors included in the package. The manufacturer shall not be liable for equipment damage if other connectors are used.
- Ensure all cables are connected tightly, securely, and correctly. Inappropriate wiring may cause poor contacts and damage the equipment.
- The PE cables must be connected and secured properly before working on the equipment. Otherwise an electric shock may occur.
- To protect the equipment and components from damage during transportation, ensure that the transportation personnel are professionally trained. All operations during the transportation have to be recorded. The equipment shall be kept in balance, thus avoiding falling down.
- The equipment is heavy. Please equip the corresponding personnel according to its weight, so that the equipment does not exceed the weight range of the human body can carry, and cause personnel injury.
- Keep the equipment stable to avoid dumping, which can result in equipment damage and personal injuries.
- Do not wear any metal thing when moving, installing, or commissioning the equipment. Otherwise, it will cause electrical shock or damages to the equipment.
- Do not put any metal parts on the equipment, otherwise it will cause electrical shock.

WARNING

- Do not apply mechanical load to the terminals, otherwise the terminals can be damaged.
- If the cable bears too much tension, the connection may be poor. Reserve a certain

length of the cable before connecting it to corresponding ports.

- Tie the same type cables together, and place cables of different types at least 30mm apart. Do not place the cables entangled or crossed.
- Place the cables at least 30mm away from the heating components or heat sources, otherwise the insulation layer of the cables may be aging or broken due to high temperature.

2.3.1 PV String Safety

WARNING

- Ensure the component frames and the bracket system are securely grounded.
- Ensure the DC cables are connected tightly, securely and correctly. Inappropriate wiring may cause poor contacts or high impedances, and damage the inverter.
- Measure the DC cable using the multimeter to avoid reverse polarity connection. Also, the voltage should be under the max DC input voltage. The manufacturer shall not be liable for the damage caused by reverse connection and overvoltage.
- The PV strings cannot be grounded. Ensure the minimum insulation resistance of PV string to the ground meets the minimum insulation resistance requirements before connecting the PV string to the inverter (R=maximum input voltage (V)/ 30mA).
- Do not connect one PV string to more than one inverter at the same time. Otherwise, it may cause damage to the inverter.
- The PV modules used with the inverter must have an IEC61730 class A rating.
- The inverter output power may decrease if the PV string inputs high voltage or current.

2.3.2 Inverter Safety

WARNING

- The voltage and frequency at the connecting point should meet the on-grid requirements.
- Additional protective devices like circuit breakers or fuses are recommended on the AC side. Specification of the protective device should be at least 1.25 times the maximum AC output current.
- The arc fault alarms will be cleared automatically if the alarms are triggered less than 5 times in 24 hours. The inverter will shutdown for protection after the 5th electric arc fault. The inverter can operate normally after the fault is solved.
- BACK-UP is not recommended if the PV system is not configured with batteries. Otherwise, there may be a risk of system power outage.
- The inverter output power may decrease when the grid voltage and frequency changes.

2.3.3 Battery Safety

⚠ DANGER

- The battery system exists high voltage during the equipment running. Keep Power Off before any operations to avoid danger. Strictly follow all safety precautions outlined in this manual and safety labels on the equipment during the operation.
- The battery system is a high voltage system. Do not touch or operate it. Keep away from it. Only professionals are allowed! Do not touch or operate without permission.
- The energy storage system consists of heavy equipment. Please use appropriate tools and take protective measures when installing and maintaining the system. Improper operations will cause personal injuries or equipment damage.
- Do not disassemble, modify, or replace any part of the battery or the power control unit without official authorization from the manufacturer. Otherwise, it will cause electrical shock or damages to the equipment, which shall not be borne by the manufacturer.
- The equipment must be installed on concrete or other non-combustible surfaces, ensuring that the foundation is level, firm, flat, dry, has sufficient load-bearing capacity, and no dents or tilts are allowed.
- Do not hit, pull, drag, squeeze, step on or pierce it shell with sharp object or put the battery into fire. Otherwise, the battery may explode.
- Do not place the battery in a high temperature environment. Make sure that there is no direct sunlight and no heat source near the battery. When the ambient temperature exceeds 60 ℃, it will cause fire.
- Do not use the battery or the power control unit if it is defective, broken, or damaged.
- Damaged battery may leak electrolyte.
- Do not move the battery system while it is working.
- Pay attention to the negative and positive during installation to avoid reverse polarity connection. Otherwise the short circuit may cause personal injuries and damage to the equipment.
- It is strictly prohibited to short-circuit the positive and negative terminals of the battery. A short circuit in the battery may cause personal injury. The instantaneous high current caused by a short circuit can release a large amount of energy and may cause a fire.
- When operating the equipment, ensure that it is not damaged and the system is functioning properly, otherwise there may be a risk of electric shock and fire.
- During the operation of the equipment, do not open the cabinet door or touch any wiring terminals or components. Otherwise, there is a risk of electric shock.
- Do not touch the running equipment to avoid being hurt as its temperature may exceed 60℃. Do not install the equipment at a place within non-professionals' reach.
- Do not pull or plug the terminals and connecting cables during the running of the BMS.

Otherwise it may cause dangers to the safety.

- Power off the BMS the moment there is abnormality happening during the running. Contact the related personnel as soon as possible.

WARNING

- Charge the battery promptly after discharging, otherwise it may cause excessive discharge and damage to the battery.
- Do not dis-/charge the battery exceeding the nominal dis-/charge current.
- Factors such as: temperature, humidity, weather conditions, etc. may limit the battery's current and affect its load.
- Contact after-sale service immediately if the battery is not able to be started. Otherwise, the battery might be damaged permanently.
- Contact After-sales Service if the battery module shall be replaced or added.
- Do not charge the battery at lower temperature. Otherwise it may decrease the capacity of the BMS.
- Do not put unrelated items into any part of the battery system.

Emergency Measures

- **Battery Electrolyte Leakage**

  If the battery module leaks electrolyte, avoid contact with the leaking liquid or gas. The electrolyte is corrosive. It will cause skin irritation or chemical burn to the operator. Anyone contact the leaked substance accidentally has to do as following:

  - Breath in the leaked substance: Evacuate from the polluted area, and seek immediate medical assistance.
  - Eye contact: Rinse your eyes for at least 15 minutes with clean water and seek immediate medical assistance.
  - Skin contact: Thoroughly wash the touch area with soap and clean water, and seek immediate medical assistance.
  - Ingestion: Induce vomiting, and seek immediate medical assistance.
- **Fire**
  - The battery may explode when the ambient temperature exceeds 150℃. Poisonous and hazardous gas may be released if the battery is on fire.
  - In the event of a fire, please make sure that the carbon dioxide extinguisher or Novec1230 or FM-200 is nearby.
  - The fire cannot be put out by ABC dry powder extinguisher. Firefighters are required to wear full protective clothing and self-contained breathing apparatus.

2.3. 4 Smart Meter Safety

WARNING
If the voltage of the power grid fluctuates, resulting in the voltage to exceed 265V, in this case, long-term overvoltage operation may cause damage to the meter. It is recommended to add a fuse with a rated current of 0.5A on the voltage input side of the meter to protect it.

2.4 Safety Symbols and Certification Marks

DANGER
● All labels and warning marks should be visible after the installation. Do not cover, scrawl, or damage any label on the equipment. ● The following descriptions are for reference only.

No.	Symbol	Descriptions
1		Potential risks exist. Wear proper PPE before any operations.
2		HIGH VOLTAGE HAZARD Disconnect all incoming power and turn off the product before working on it.
3		High-temperature hazard. Do not touch the product under operation to avoid being burnt.
4		Operate the equipment properly to avoid explosion.
5		Batteries contain flammable materials, beware of fire.
6		The equipment contains corrosive electrolytes. In case of a leak in the equipment, avoid contact the leaked liquid or gas.

7		Delayed discharge. Wait 5 minutes after power off until the components are completely discharged.
8		Keep the equipment away from open flame or ignition source.
9		Keep the equipment away from children.
10		Do not pour with water.
11		Read through the user manual before any operations.
12		Wear personal protective equipment during installation, operation and maintaining.
13	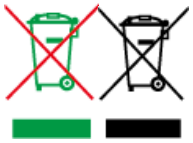	Do not dispose of the System as household waste. Deal with it in compliance with local laws and regulations, or send it back to the manufacturer.
14		No stepping.
15		Grounding point.
16		Recycle regeneration mark. Put the battery in the right place and recycle it in compliance with local environmental regulations.
17		CE Mark
18		TUV mark

19		RCM mark

2.5 EU Declaration of Conformity

2.5.1 Equipment with Wireless Communication Modules

GoodWe Technologies Co., Ltd. hereby declares that the equipment with wireless communication modules sold in the European market meets the requirements of the following directives:

- Radio Equipment Directive 2014/53/EU (RED)
- Restrictions of Hazardous Substances Directive 2011/65/EU and (EU) 2015/863 (RoHS)
- Waste Electrical and Electronic Equipment 2012/19/EU
- Registration, Evaluation, Authorization and Restriction of Chemicals (EC) No 1907/2006 (REACH)

2.5.2 Equipment without Wireless Communication Modules (Except Battery)

GoodWe Technologies Co., Ltd. hereby declares that the equipment without wireless communication modules sold in the European market meets the requirements of the following directives:

- Electromagnetic compatibility Directive 2014/30/EU (EMC)
- Electrical Apparatus Low Voltage Directive 2014/35/EU (LVD)
- Restrictions of Hazardous Substances Directive 2011/65/EU and (EU) 2015/863 (RoHS)
- Waste Electrical and Electronic Equipment 2012/19/EU
- Registration, Evaluation, Authorization and Restriction of Chemicals (EC) No 1907/2006 (REACH)

2.5.3 Battery

GoodWe Technologies Co., Ltd. hereby declares that batteries sold in the European market meets the requirements of the following directives:

- Electromagnetic compatibility Directive 2014/30/EU (EMC)
- Electrical Apparatus Low Voltage Directive 2014/35/EU (LVD)
- Battery Directive 2006/66/EC and Amending Directive 2013/56/EU
- Waste Electrical and Electronic Equipment 2012/19/EU

- Registration, Evaluation, Authorization and Restriction of Chemicals (EC) No 1907/2006 (REACH)

You can download the EU Declaration of Conformity on the official website: https://en.goodwe.com.

3 System Introduction

3.1 System Overview

The commercial and industrial smart inverter solution consists of inverter, static transfer switch cabinet, battery system, smart meter, smart dongle, etc.. In the PV system, solar energy can be convert to electric energy for commercial and industrial needs. The IoT devices in the system controls the electrical equipment by recognizing the overall power consumption situation. So that the power will be managed in a smart way, deciding whether the power is to be used by the loads, stored in batteries, or exported to the grid, etc.

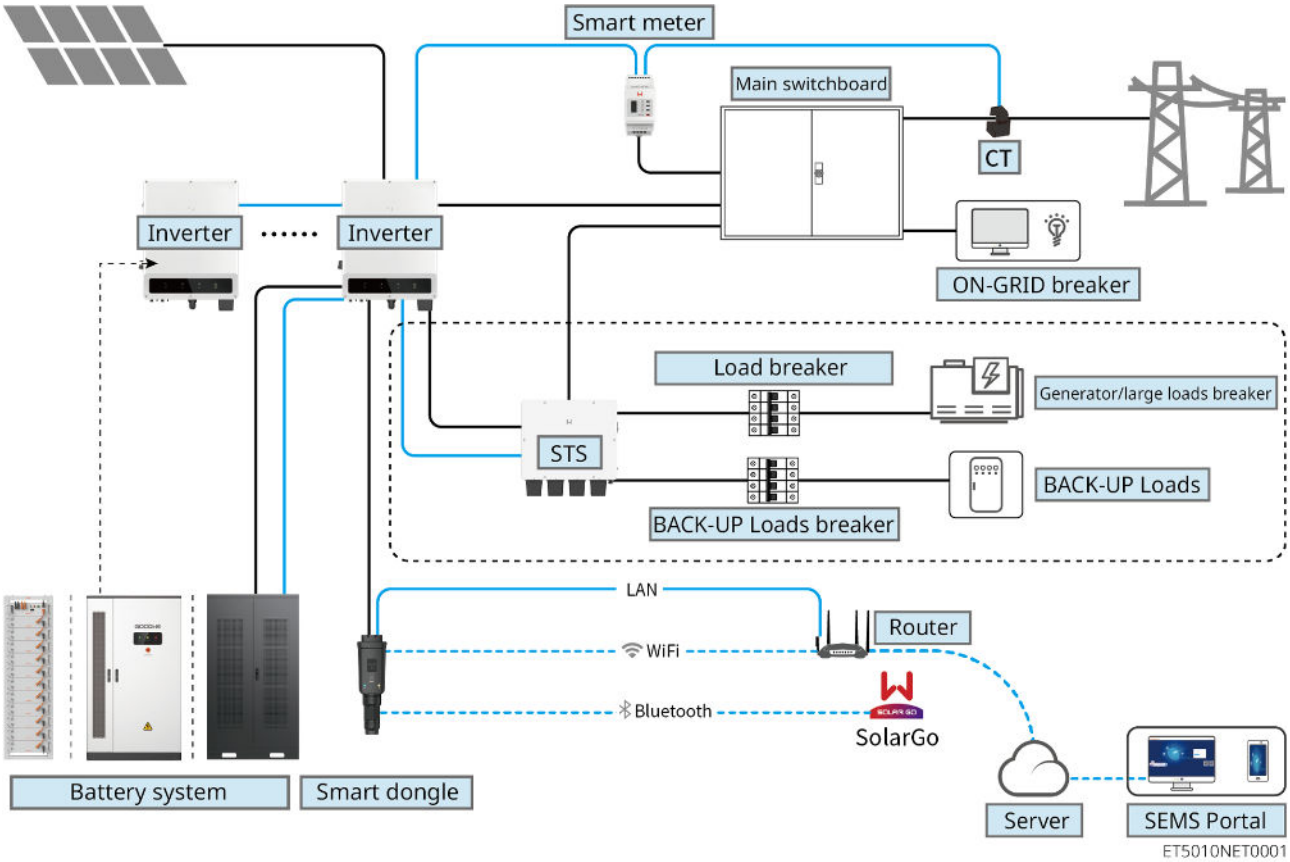

Product Type	Model	Description
Inverter	GW40K-ET-10 GW50K-ET-10	A maximum of 4 inverters can be connected in a parallel system. Inverter firmware requirements for parallel connections: ● Consistent firmware version ● ARM version: 10.420 or above

		● DSP version: 01.203 or above
BMS Type	LX C101-10 LX C120-10 LX C138-10 LX C156-10	● A maximum of 3 battery systems can be clustered in a system. ● Battery systems of different models cannot be connected in parallel together.
	GW100KWH-D-10 GW100KWH-D-10(Extension)	
	GW51.2-BAT-I-G10 GW56.3-BAT-I-G10	● A maximum of 6 battery systems can be clustered in a system. ● Battery systems of different models cannot be connected in parallel together.
Smart meter	● GM330 ● GM3000	● Please use GM330 smart meter in inverter parallel scenario; in single inverter scenario, GM330 or GM3000 smart meters can used. ● GM330: It will be delivered with inverter. The CT for GM330 can be purchased from GoodWe or other suppliers. CT ratio: nA/5A. ➢ nA: CT primary input current, n ranges from 200 to 5000. ➢ 5A: CT Secondary input current. ● GM3000: It needs to be purchased separately and is only suitable single inverter scenario. The CT cannot be replaced. CT ratio: 120A/40mA.
Smart dongle	● WiFi/LAN Kit-20 ● Ezlink3000	● In single inverter system, install WiFi/LAN Kit-20. ● In parallel scenario, the EzLink 3000 must be connected to master inverter. Do not connect any communication module to slave inverter. The firmware version of EzLink3000 should be 1.5.4 or above.

3.2 Product Overview

3.2.1 Inverter

Inverters control and optimize the power in PV systems through an integrated energy management system. The power generated in the PV system can be used, stored in the battery, output to the utility grid, etc.

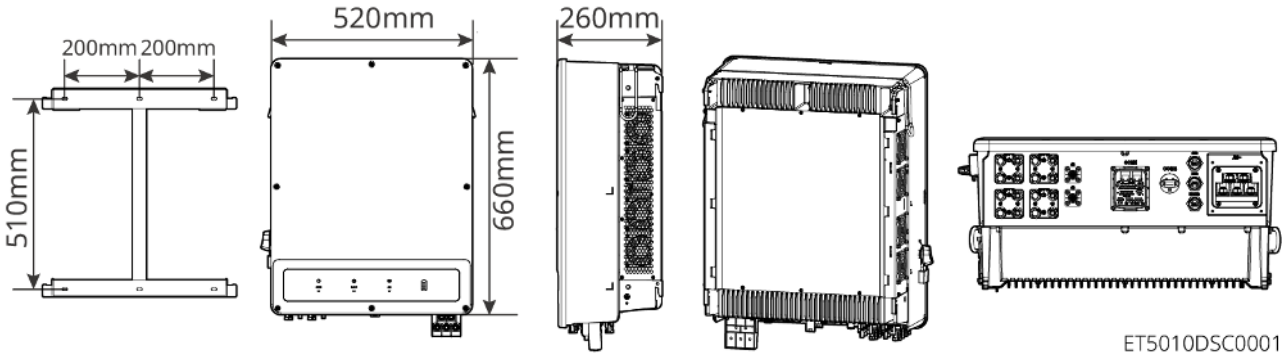

No.	Model	Nominal output power	Nominal output voltage	Number of MPPT
1	GW40K-ET-10	40kW	380, 3L/N/PE	3
2	GW50K-ET-10	50kW		4

3.2.2 STS

The Static Transfer Switch can be used in a commercial or industrial energy storage system. With the STS, the energy storage system can switch the inverter status between on-grid and off-grid. STS supports connection of generators and large loads such as heat pumps and high-power motors. The power of a single non-variable frequency motor device should be ≤5.5kVA.

Utility grid power fails:

- When the energy storage system is not connected to the generator, the system switches to off-grid operation. PV power generation or battery discharge for load use.
- When the energy storage system is connected to the generator and the PV power generation and battery discharge meet the load requirements, the generator will not start. The system switches to off grid working state.

- When the energy storage system is connected to the generator and the PV power generation and battery discharge cannot meet the load requirements, the system switches to the grid connected working state of the generator. The generator generates power for load use, the PV and generator generate power to charge the battery.
- When the power grid is restored, the system switches to the grid connected working state.

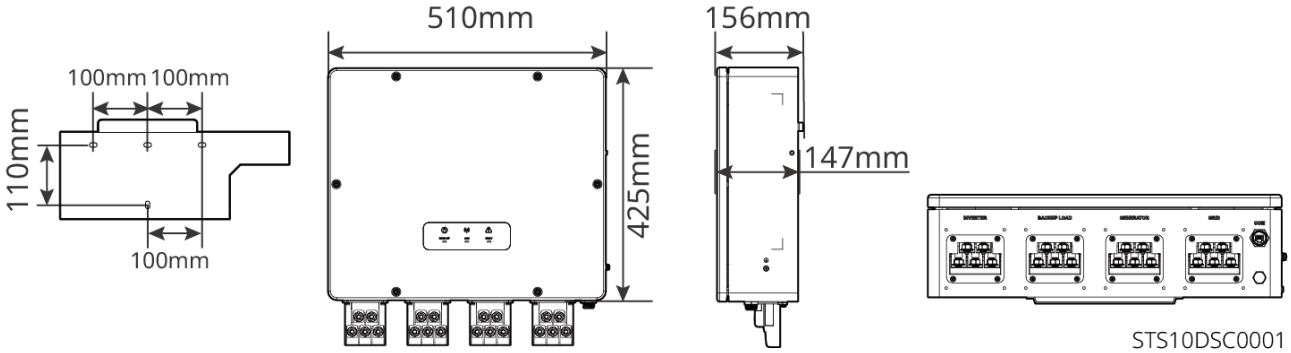

3.2.3 Battery

The battery system is composed of PCU and battery modules.

The battery system can store and release electricity according to the requirements of the PV energy storage system, and the input and output ports of the energy storage system are all high-voltage direct current.

Lynx C: LX C 101-10, LX C120-10, LX C138-10, LX C156-10

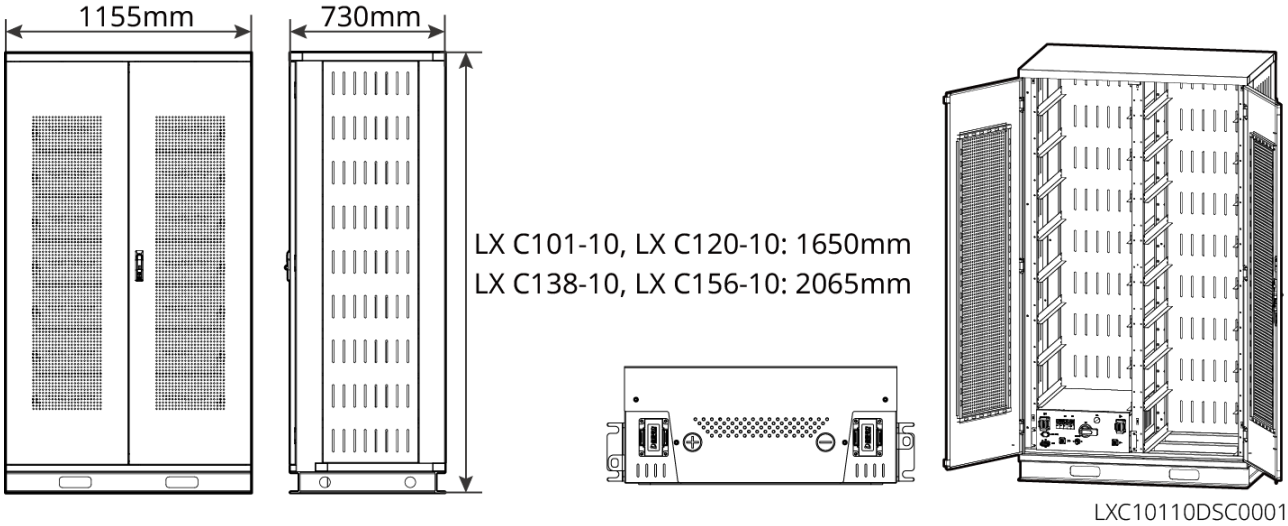

No.	Model	Battery Module Quantity	Height (mm)	Usable energy (kWh)
1	LX C 101-10	11	1650	101.38

2	LX C120-10	13		119.81
3	LX C138-10	15	2065	138.24
4	LX C156-10	17		156.67

Lynx C: GW100KWH-D-10, GW100KWH-D-10(Extension)

GW100KWH-D-10 is equipped with AC cabinet and can be equipped with inverter.

GW100KWH-D-10 can be connected with GW100KWH-D-10 (Extension) in parallel; and the battery system is connected in parallel to expand the storage capacity.

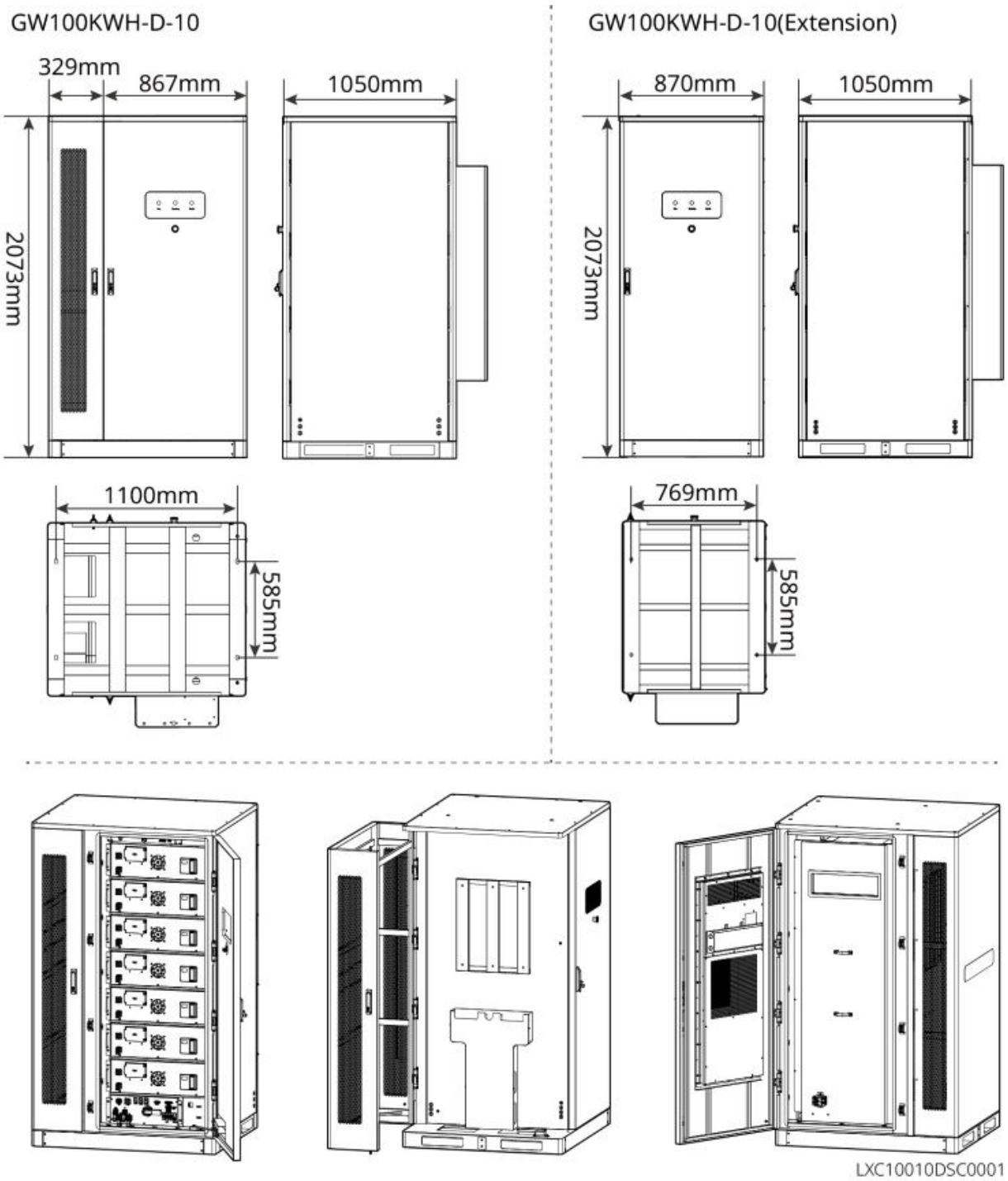

No.	Model	Usable energy (kWh)	With AC Unit
1	GW100KWH-D-10	100kWh	Yes
2	GW100KWH-D-10(Extension)		No

BAT: GW51.2-BAT-I-G10, GW56.3-BAT-I-G10

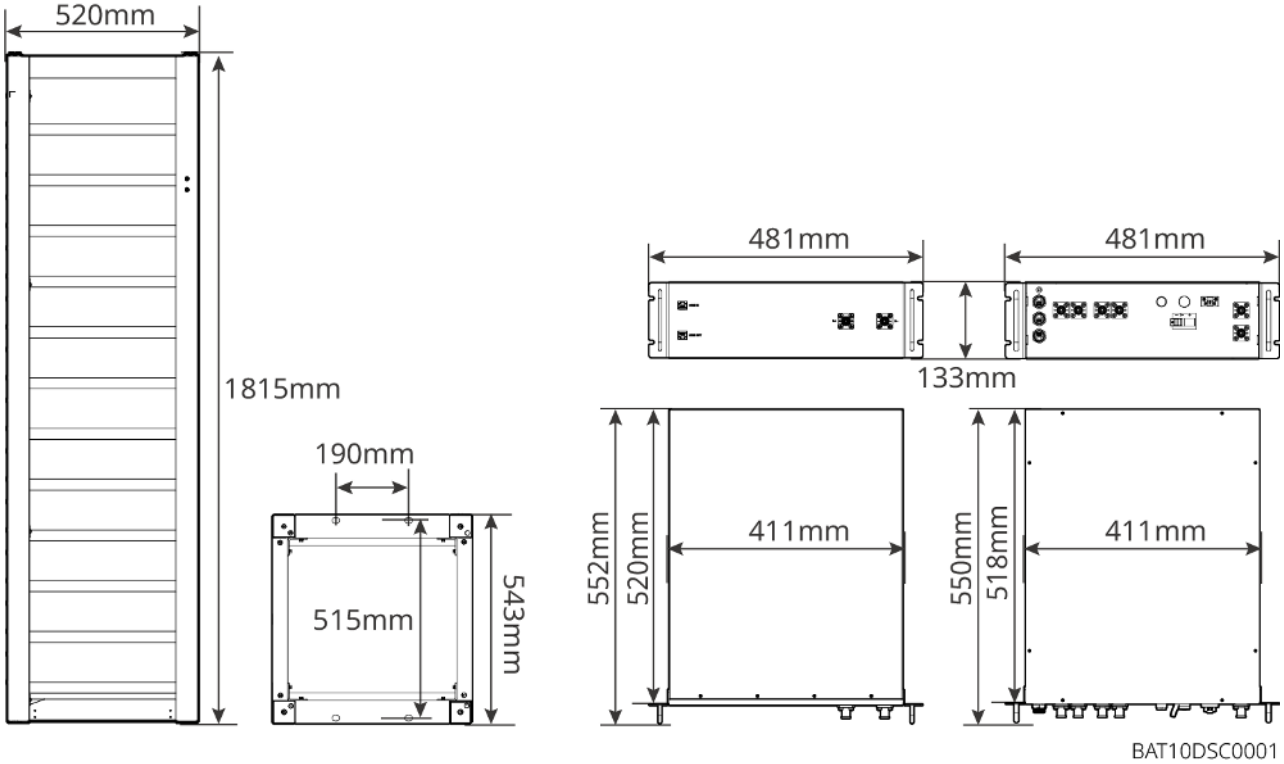

No.	Model	Battery Module Quantity	Height (mm)	Usable energy (kWh)
1	GW51.2-BAT-I-G10	10	1815	51.2
2	GW56.3-BAT-I-G10	11	1815	56.3

3.2.4 Smart Meter

The smart meter can measure the grid voltage, current, power, frequency, electric energy and other parameters, and transfer the data to the inverter to control the input and output power of the energy storage system.

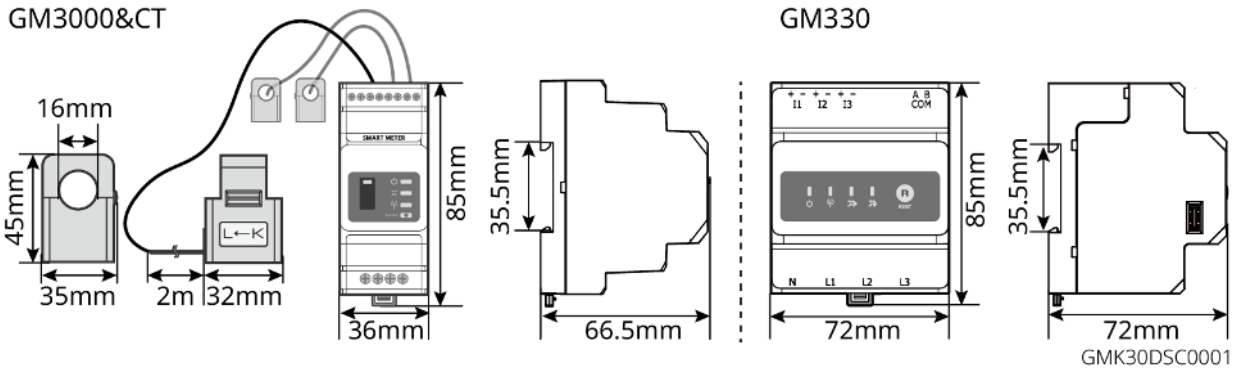

No.	Model	Applicable scenarios
1	GM330	It will be delivered with inverter. The CT for GM330 can be purchased from GoodWe or other suppliers. CT ratio: nA/5A. ● nA: CT primary input current, n ranges from 200 to 5000. ● 5A: CT Secondary input current.
2	GM3000	It needs to be purchased separately and is only suitable for single inverter system. The CT cannot be replaced. CT ratio: 120A/40mA.

3.2.5 Smart Dongle

The smart dongle can transmit various power generation data to SEMS Portal, the remote monitoring platform, in real time. And connect to the SolarGo app to complete local equipment commissioning.

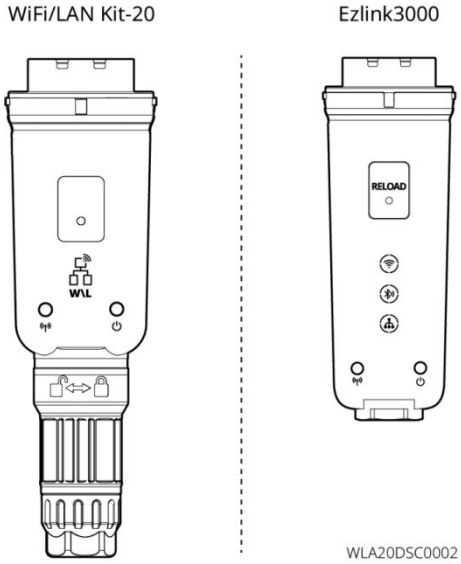

No.	Model	Signal	Applicable scenarios
1	WiFi/LAN Kit-20	WiFi, LAN, Bluetooth	Single inverter
2	Ezlink3000	WiFi, LAN, Bluetooth	Master inverter of the parallel connected inverters

3.3 Supported Grid Types

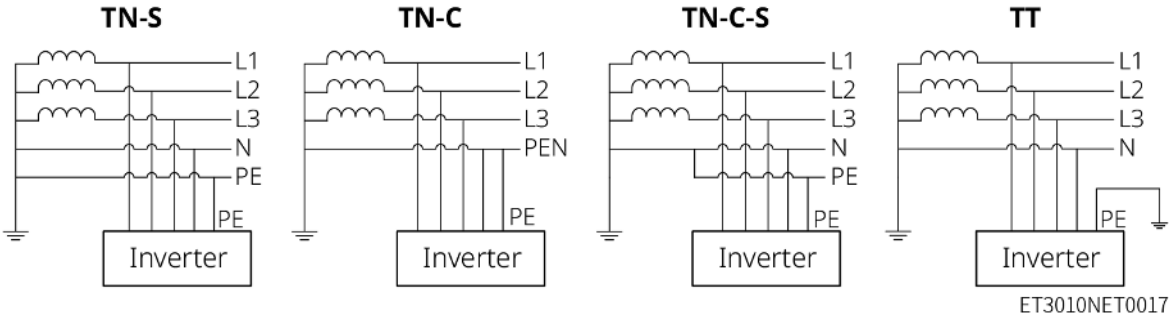

3.4 System Working Mode

Self-use Mode

- Self-use mode is the basic working mode of the system.
- When the power generated in the PV system is sufficient, it will supply the loads in priority. The excess power will charge the batteries first, then the remaining power will be sold to the utility grid. When the power generated in the PV system is insufficient, the battery will supply the loads in priority. If the battery power is insufficient, the load will be powered by the utility grid.

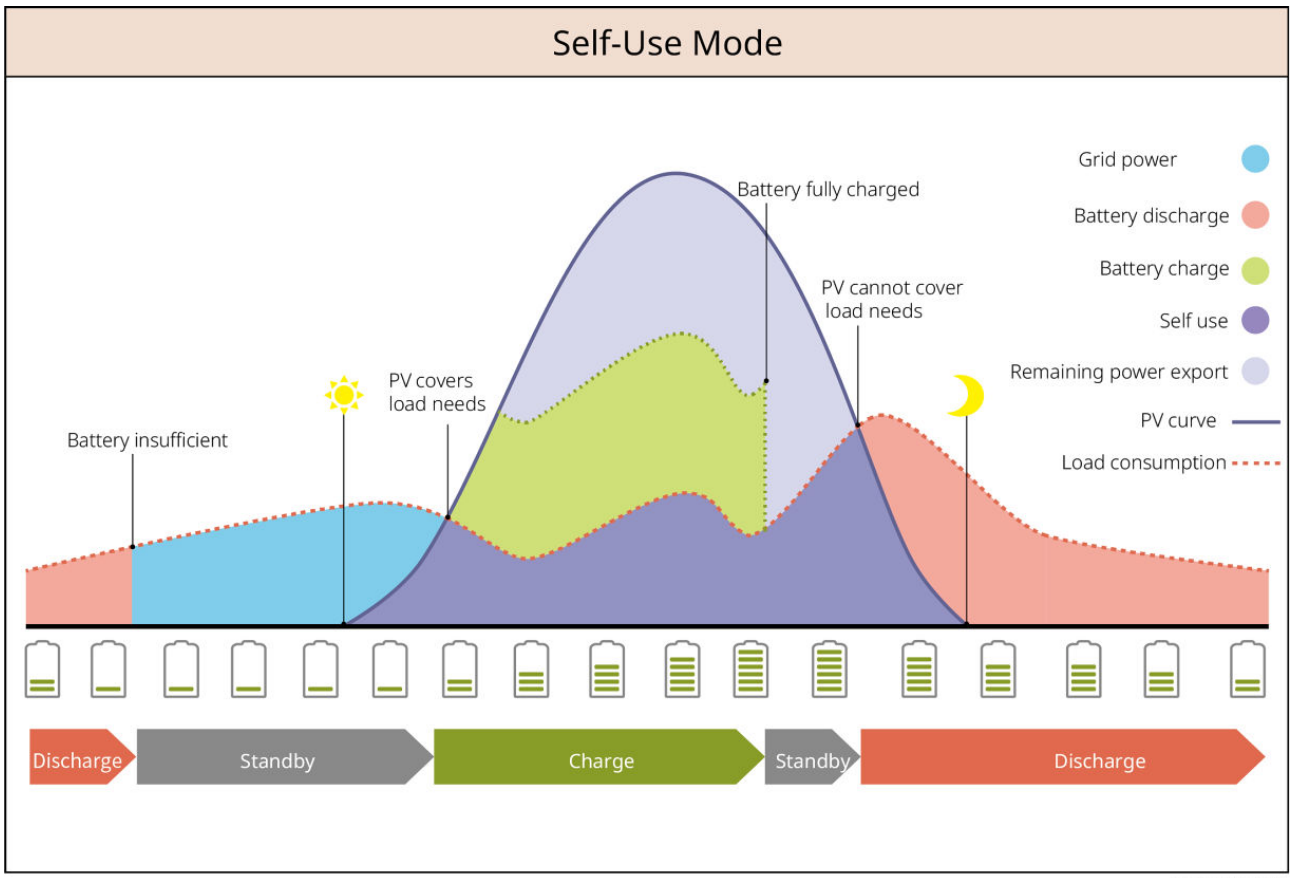

SLG00NET0009

Back-up mode

- The back-up mode is mainly applied to the scenario where the grid is unstable.
- When the grid is disconnected, the inverter turns to off-grid mode and the battery will supply power to the BACK-UP loads; when the grid is restored, the inverter switches to grid-tied mode.
- The battery will be charged to preset SOC protection value by utility grid or PV when the system is running on-grid. So that the battery SOC is sufficient to maintain normal working when the system is off-grid. The purchase of electricity from the power grid to charge the battery must comply with local laws and regulations.

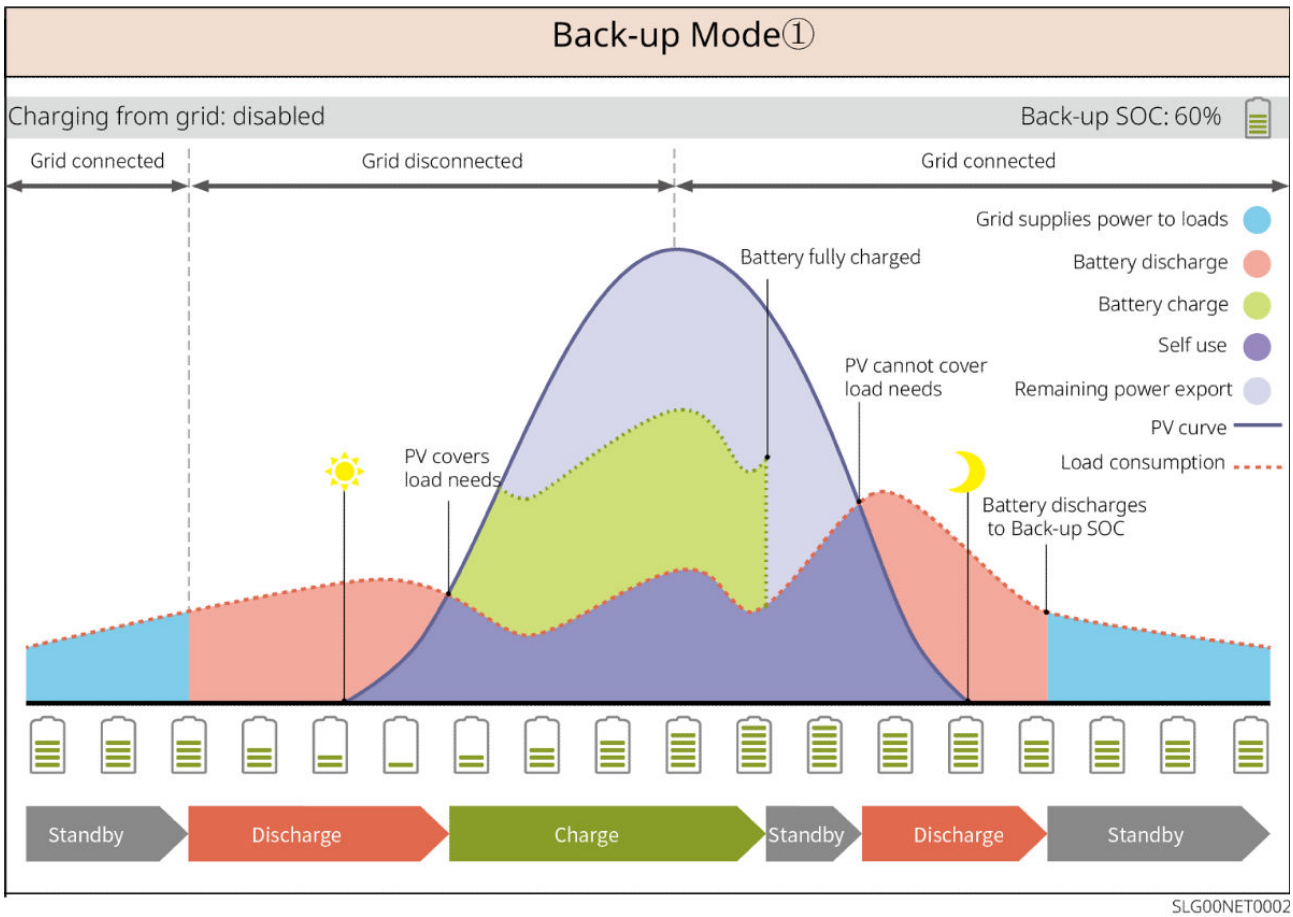

SLG00NET0002

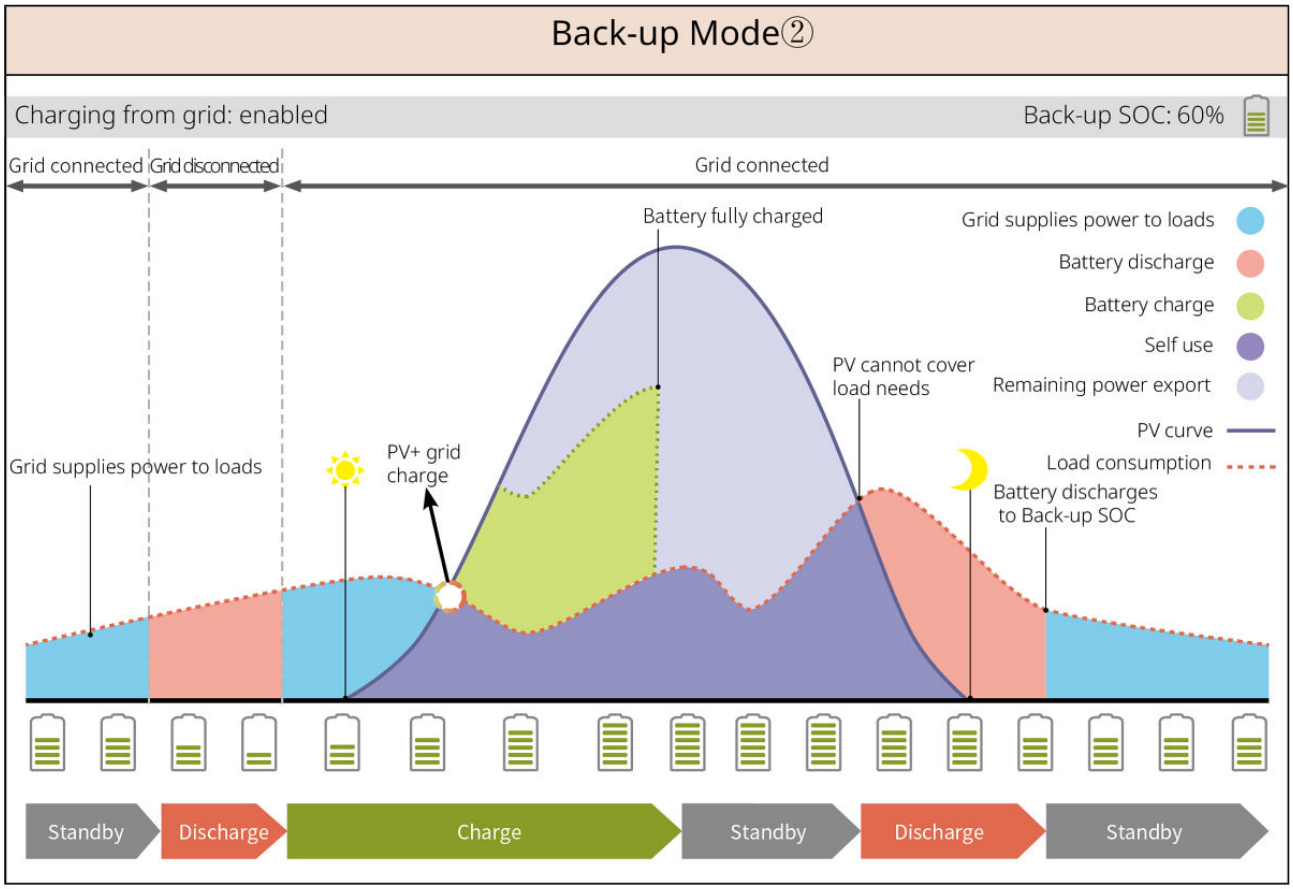

SLG00NET0003

TOU mode

It is recommended to use TOU mode in scenarios when the peak-valley electricity price varies a lot. Select TOU mode only when it meets the local laws and regulations.

For example, set the battery to charge mode during Vally period to charge battery with grid power. And set the battery to discharge mode during Peak period to power the load with the battery.

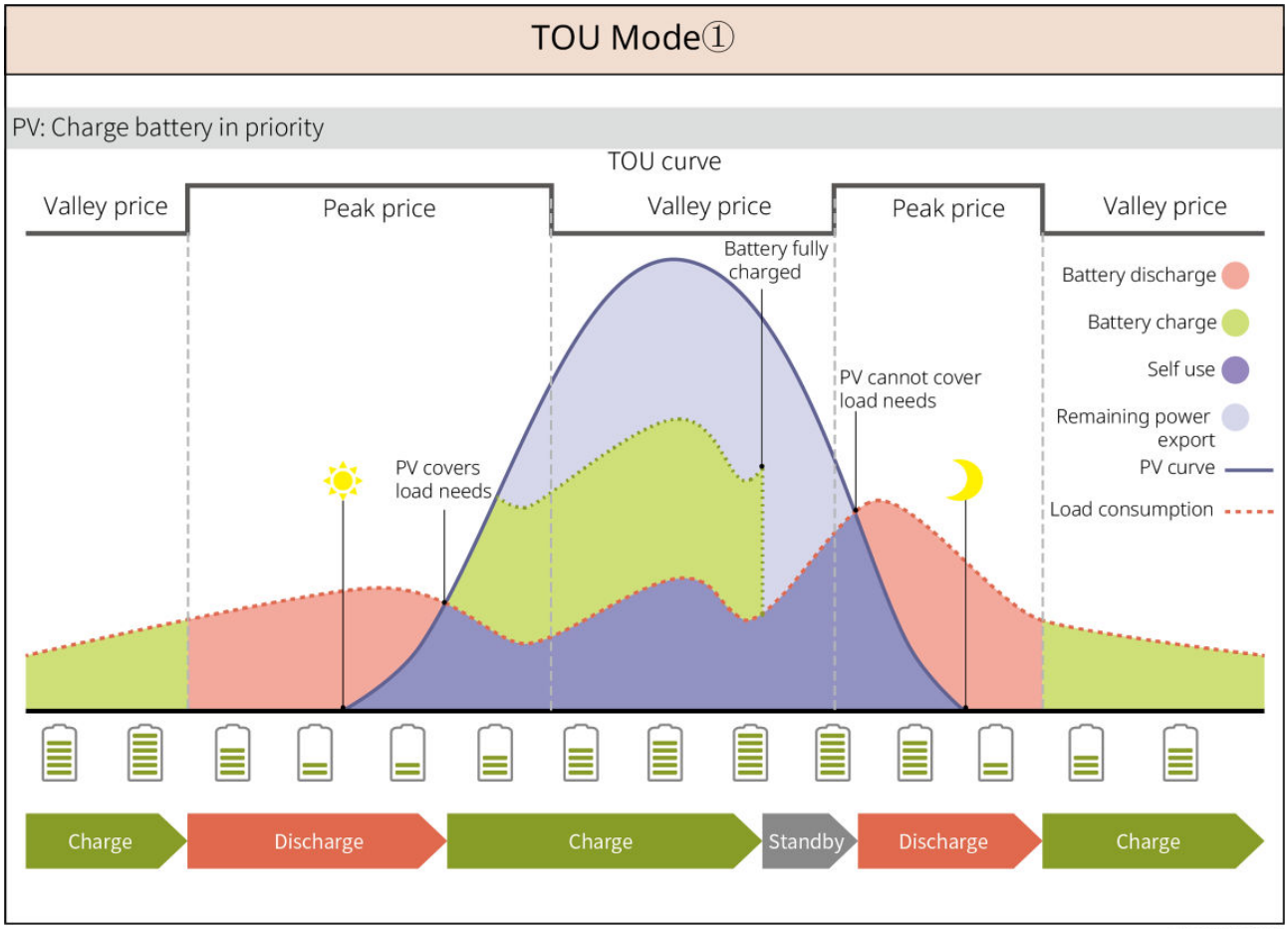

SLG00NET0004

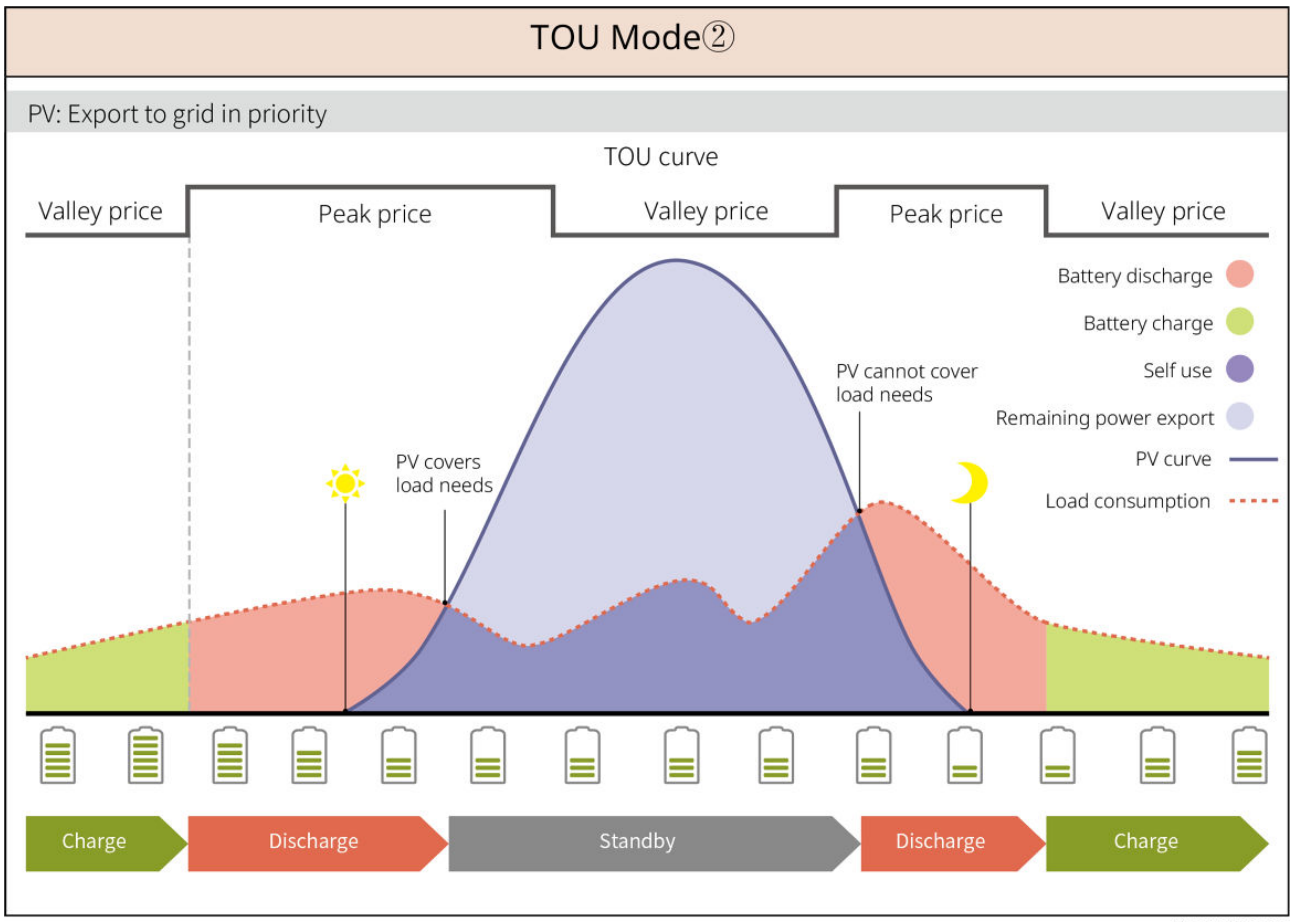

SLG00NET0005

Smart charging mode

- In some countries/regions, the PV power feed into the utility grid is limited.
- Set peak limit power, charge the battery using the surplus power when the PV power exceeds the peak limit power. Or set charging time, during the charging time, the PV power can be used to charge the battery.

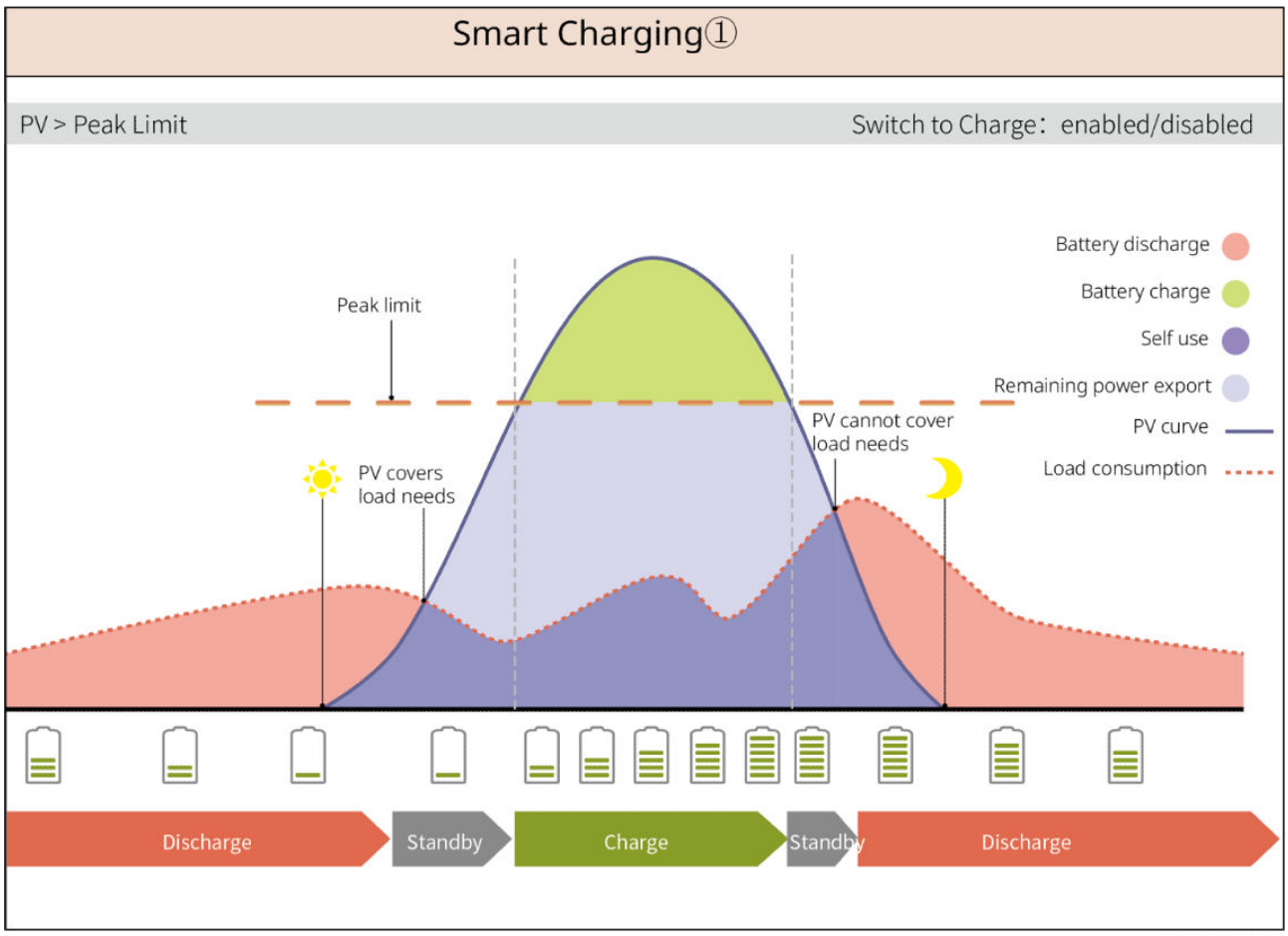

SLG00NET0006

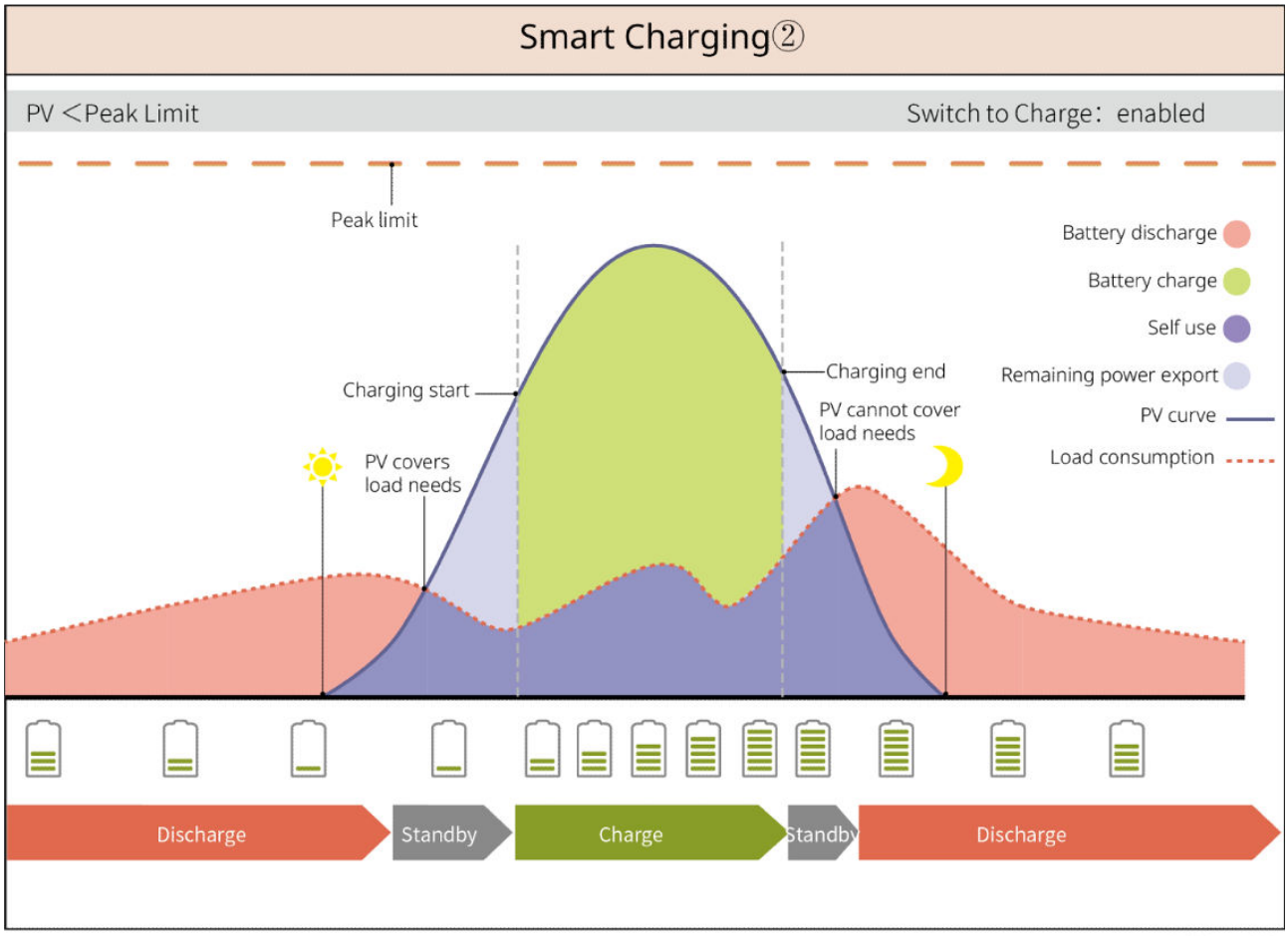

SLG00NET0007

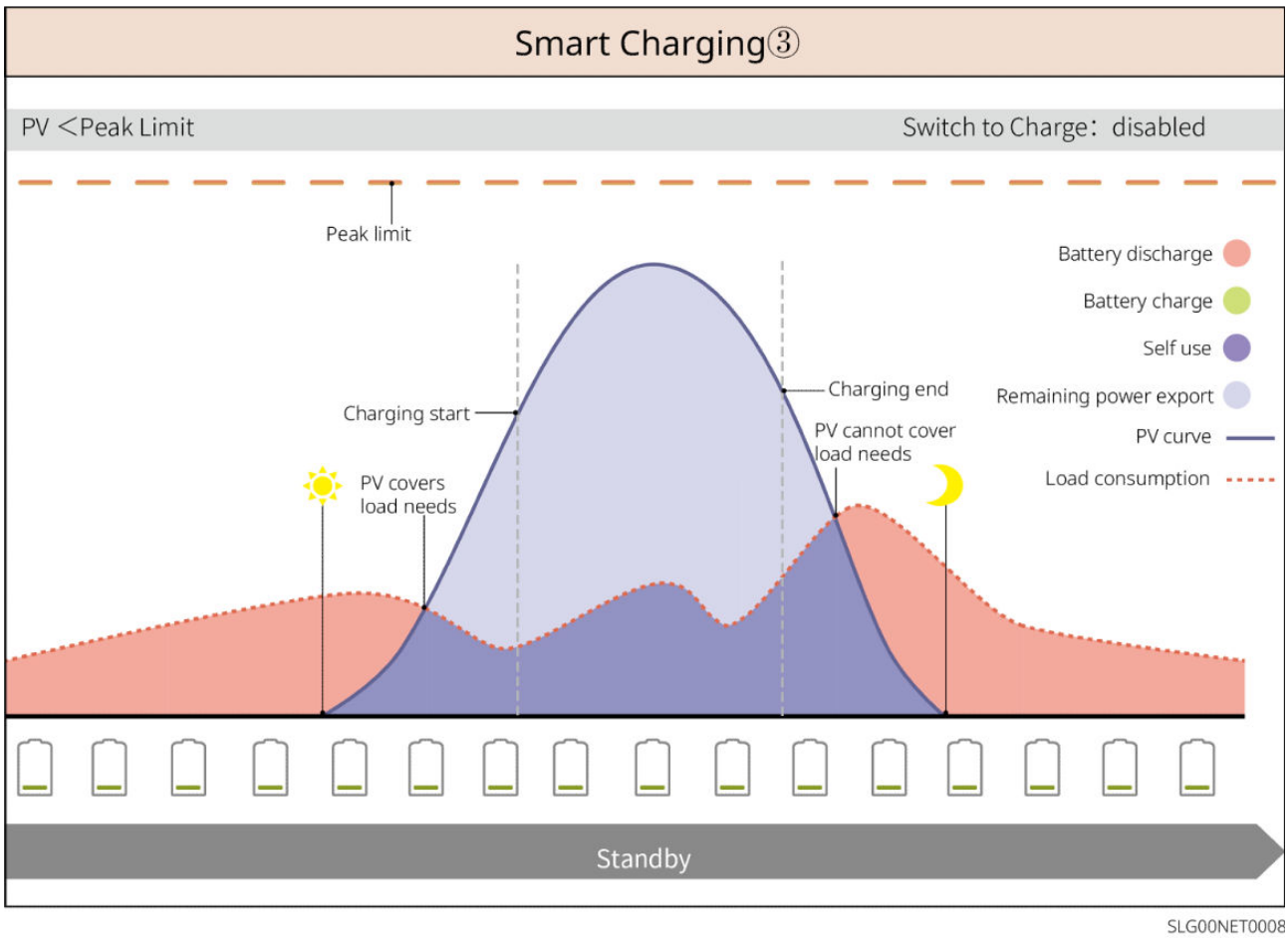

Peakshaving Mode

- Peakshaving mode is mainly applicable to industrial and commercial scenarios.
- When the total power consumption of the loads exceeds the peak shaving limit, the battery discharges to reduce the power consumption exceeds the peak shaving limit.
- If the SOC of the battery system is lower than the Reserved SOC for Peakshaving, the system will import power from the utility grid according to the set time period, load power, and Import Power Limit.

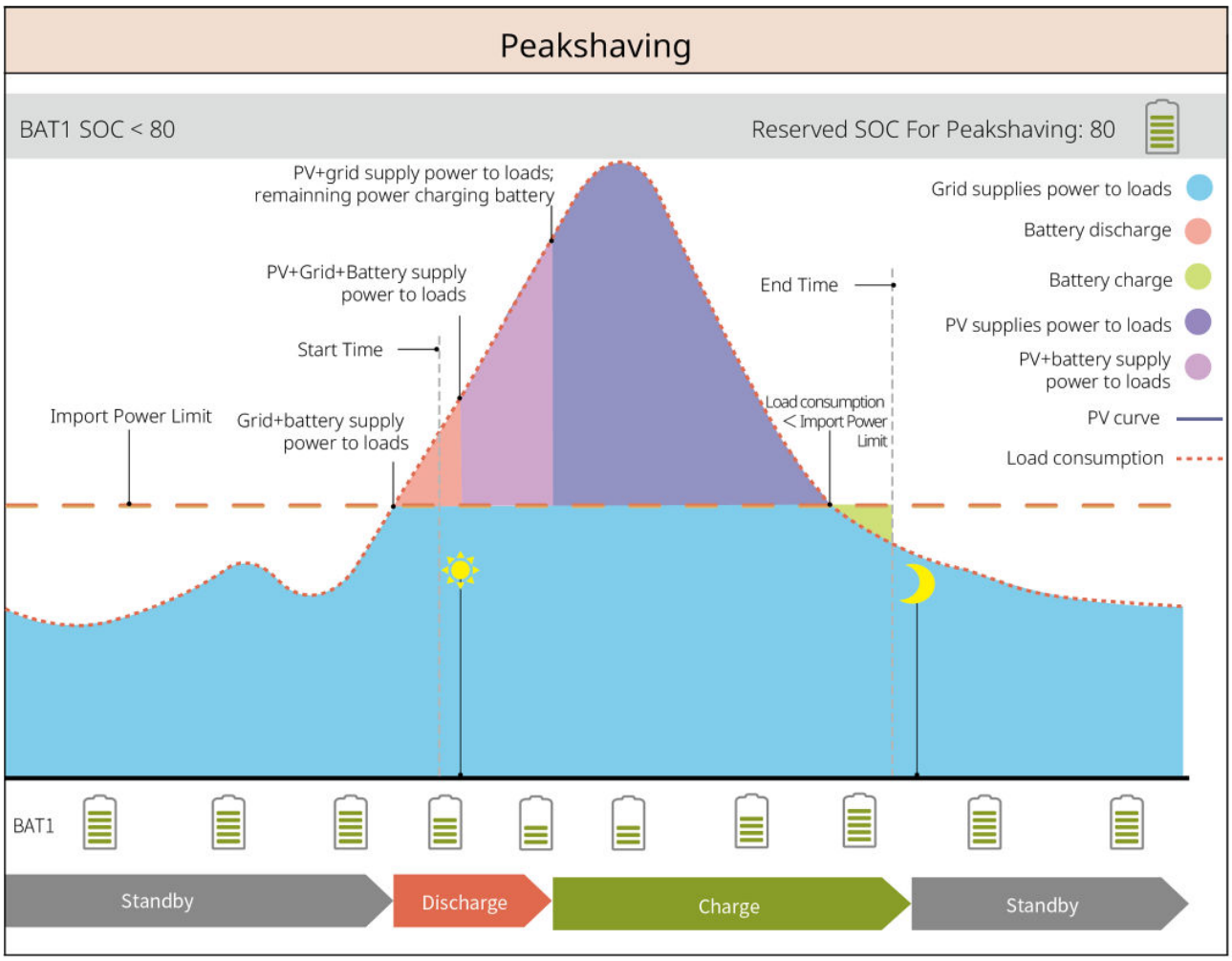

SLG00NET0001

4 Check and Storage

4.1 Check before Receiving

Check the following items before receiving the product.

1. Check the outer packing box for damage, such as holes, cracks, deformation, and other signs of equipment damage. Do not unpack the package and contact the supplier as soon as possible if any damage is found.
2. Check the product model. If the model is not what you requested, do not unpack the product and contact the supplier.

4.2 Package Content

WARNING
Check the deliverables for correct model, complete contents, and intact appearance. Contact the supplier as soon as possible if any damage is found.

4.2.1 Package of the Inverter (ET 40-50kW)

Parts	Description	Parts	Description
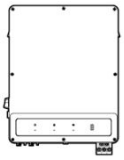	Inverter x 1		Mounting plate x 1
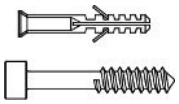	Expansion bolt x 6	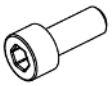	M5 Screw x 2
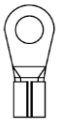	Grounding terminal x 1		PIN terminal x 25
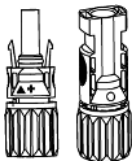	PV connector ● GW40K-ET-10 x 6 ● GW50K-ET-10 x 8	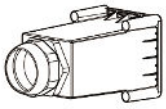	AC cover x 1
	Smart dongle x 1		7PIN terminal x 1
	6PIN terminal x 1		3PIN terminal x 2

	2PIN terminal x 2		Battery connector x 2
	Smart meter communication cable x 1		AC OT terminal x 6
	PV wiring tool x1		Insulation sleeve x 6
	Smart meter and accessories x 1		Documents x 1

4.2.2 Package of the STS

Parts	Description	Parts	Description
	STS x 1		Mounting plate x 1
	Expansion bolt x 4		M5 Screw x 2
	PE terminal x 1		AC cover x 4

	AC OT terminal x 22 The AC OT terminals shipped with the inverter are suitable for scenarios with a current of 90A. If the circuit current is 200A, please contact the supplier or after-sales service center to obtain the corresponding specification terminals.		Insulation sleeve x 22
	Inverter communication cable x 1 Standard: 10m. The length is optional, and the maximum length is 100m.		Documents x 1

4.2.3 Package of the Battery (Lynx C)

4.2.3.1 LX C 101-10, LX C120-10, LX C138-10, LX C156-10

NOTICE
All the other accessories except the battery cabinet are put in the battery cabinet.

- **Battery Cabinet and Accessories**

Parts	Description	Parts	Description
	Battery cabinet x 1		AC connector x 1
or	Diameter-varying tube x 2 & Power cable connector A x 2 or Power cable connector B x 2		Cable tie x 20

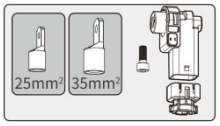			
	Battery power connecting bar A x 1		Battery power connecting bar B x 1
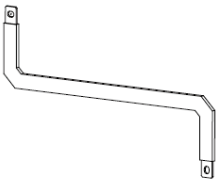	Battery power connecting bar C ● LX C101-10 x 9 ● LX C120-10 x 11 ● LX C138-10 x 13 ● LX C156-10 x 15		Battery power connecting bar D x 1
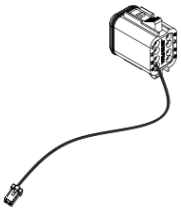	COM cable between PCU and battery x 1		COM cable between batteries ● LX C101-10 x 10 ● LX C120-10 x 12 ● LX C138-10 x 14 ● LX C156-10 x 16
	M6 screw ● LX C101-10, LX C120-10 x 56 ● LX C138-10, LX C156-10 x 72		M8 screw ● LX C101-10 x 24 ● LX C120-10 x 28 ● LX C138-10 x 32 ● LX C156-10 x 36
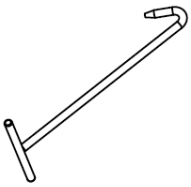	Mounting hook x 4	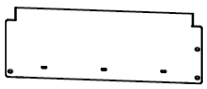	Sealing plate ● LX C101-10 x 10, LX C138-10 x 2 ● LX C120-10, LX C156-10 x 0
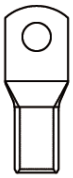	PE terminal x 2		ET 40-50 series inverter communication cable x 1

	ETC/ BTC series inverter communication cable x 1		Documents x 1
			Communication cable for 3 sets of batteries in parallel connection x 1 (purchase separately)
			Communication cable for 2 sets of batteries in parallel connection x 1 (purchase separately)

- **Battery module**

Parts	Description
	Battery Module ● LX C101-10 x 11 ● LX C120-10 x 13 ● LX C138-10 x 15 ● LX C156-10 x 17

4.2.3.2 GW100KWH-D-10, GW100KWH-D-10(Extension)

Parts	Description	Parts	Description
	Battery system&AC unit Only for GW100KWH-D-10 GW100KWH-D-10		BMS Type Only for GW100KWH-D-10(Extension) x1
	Battery-PCU connecting bar x1		Battery-battery connecting bar x6

	M8 screw ● GW100KWH-D-10 x 27 ● GW100KWH-D-10(Extension) x 21		M5 nut x 4 Only for GW100KWH-D-10
	M12 waterproof component x 1 Only for GW100KWH-D-10		M18 waterproof component x 2
	M20 waterproof component x 6		M22 waterproof component x 4
	Cable tie x 10		Terminal resistor x 2 Only for GW100KWH-D-10(Extension)
	Inverter-PCU communication cable Power cable x 2 Only for GW100KWH-D-10		Expansion bolt x 4
	PE terminal x 4		Inverter-PCU communication cable x 1

	Lifting ring x 4		Wrench x 1
	PCU power cable wiring terminal ● GW100KWH-D-10 x 2 ● GW100KWH-D-10(Extension) x 4		Tube for air-conditioner x 1
	Inverter and battery grounding cable x 1 Only for GW100KWH-D-10		Documents x 1
			Air-conditioner power cable x 1 Tubular terminal for air-conditioner x 2 OT terminal for air-conditioner x 4

4.2.3.3 GW51.2-BAT-I-G10, GW56.3-BAT-I-G10

- **Battery Racks and Accessories**

Parts	Description	Parts	Description
	Battery Racks x 1		Rubber Pad x 4
	M5 Screws x 35		

- **Power Control Unit (PCU) and Accessories**

Parts	Description	Parts	Description
	PCU x 1		M12 Expansion bolt x 4
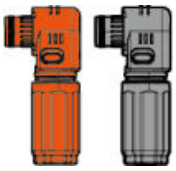	Power cable connector x 2	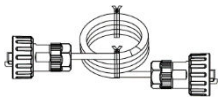	Communication cable between a battery and an inverter x 1
	Cable tie x 10		Name plate x1
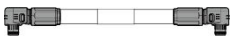	B- power cable x 1		B+ power cable x 1
	Power cable between batteries ● GW51.2-BAT-I-G10 x 10 ● GW56.3-BAT-I-G10 x 11	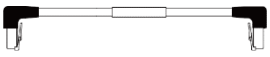	Communication cable between batteries ● GW51.2-BAT-I-G10 x 10 ● GW56.3-BAT-I-G10 x 11
	PE terminal x 2		M5 Screws x 50
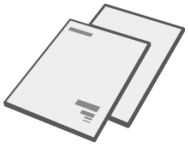	Document x 1		

N：The quantity depends on the product configuration.

- **Battery Module**

Parts	Description
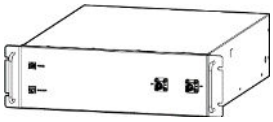	Battery Module ● GW51.2-BAT-I-G10 x 10 ● GW56.3-BAT-I-G10 x 11

- **Other accessories (optional)**

Parts	Description	Parts	Description
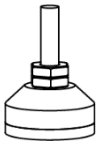	Ground support x 4	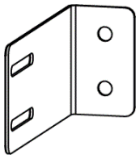	Wall support x 2
	ST6.3 screws x 4		M5 screws x 4

4.2.4 Smart Meter (GM330)

Parts	Description	Parts	Description
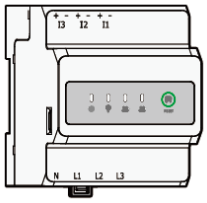	Smart meter and CT x 1	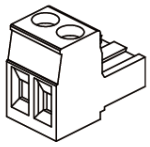	2PIN terminal x 1
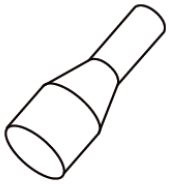	Tubular terminal x 6	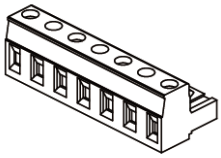	7PIN terminal x 1
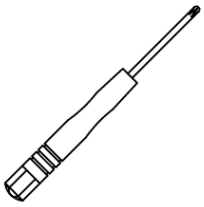	Screw driver x 1	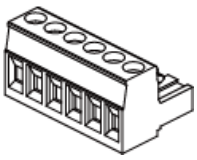	6PIN terminal x 1
	2PIN-RJ45 adapter cable x 1		Documents x 1

4.2.5 Smart Meter (GM3000)

Parts	Quantity	Parts	Quantity

	Smart meter and CT x 1		2PIN-RJ45 adapter cable x 1
	Tubular terminal x 3		USB plug x 1
	Screws driver x 1		Documents x 1

4.2.6 Smart Dongle (WiFi/ LAN Kit-20)

Parts	Description	Parts	Description
	Smart dongle x 1		Documents x 1

4.2.7 Smart Dongle (Ezlink3000)

Parts	Description	Parts	Description
	Smart dongle x 1		LAN cable connector x 1
	Documents x1		Unlock tool x 1 Remove the module using the removing tool if it is included. If the tool is not provided, remove the module by pressing the unlock button on the module.

4.3 Storage

If the equipment is not to be installed or used immediately, please ensure that the storage environment meets the following requirements: If the equipment has been long term stored, it should be checked by professionals before being put into use.

Packing requirements:

Do not unpack the outer package or throw the desiccant away.

Installation environment requirements:

1. Place the equipment in a cool place where away from direct sunlight.
2. Store the equipment in a clean place. Make sure the temperature and humidity are appropriate and no condensation. Do not install the equipment if the ports or terminals are condensed.

   Battery storage temperature range (T):

   LX C101-10, LX C120-10, LX C138-10, LX C156-10:

   - When -20℃≤T＜0℃ or 35℃＜T≤45℃, the storage period cannot exceed 3 month.
   - When 0℃≤T≤35℃, the storage period cannot exceed 1 year.

   GW51.2-BAT-I-G10, GW56.3-BAT-I-G10:

   - When 35℃≤T≤45℃, the storage period cannot exceed 6 month.
   - When -20℃≤T≤35℃, the storage period cannot exceed 1 year.
3. Keep the equipment away from flammable, explosive, and corrosive matters.

Stacking requirements:

1. The height and direction of the stacking inverter should follow the instructions on the packing box.
2. The inverter must be stacked with caution to prevent them from falling.

Battery Dis-/Charge Requirements:

Storage SOC (LX C101-10, LX C120-10, LX C138-10, LX C156-10): 25%-50% SOC. Circle the charge-discharge every 6 months.

Storage SOC (GW51.2-BAT-I-G10, GW56.3-BAT-I-G10): 40%-100% SOC. Circle the charge-discharge every 12 months.

5 Installation

DANGER

Install and connect the equipment using the deliverables included in the package.

Otherwise, the manufacturer shall not be liable for the damage.

5.1 System Installation and Commissioning Procedure

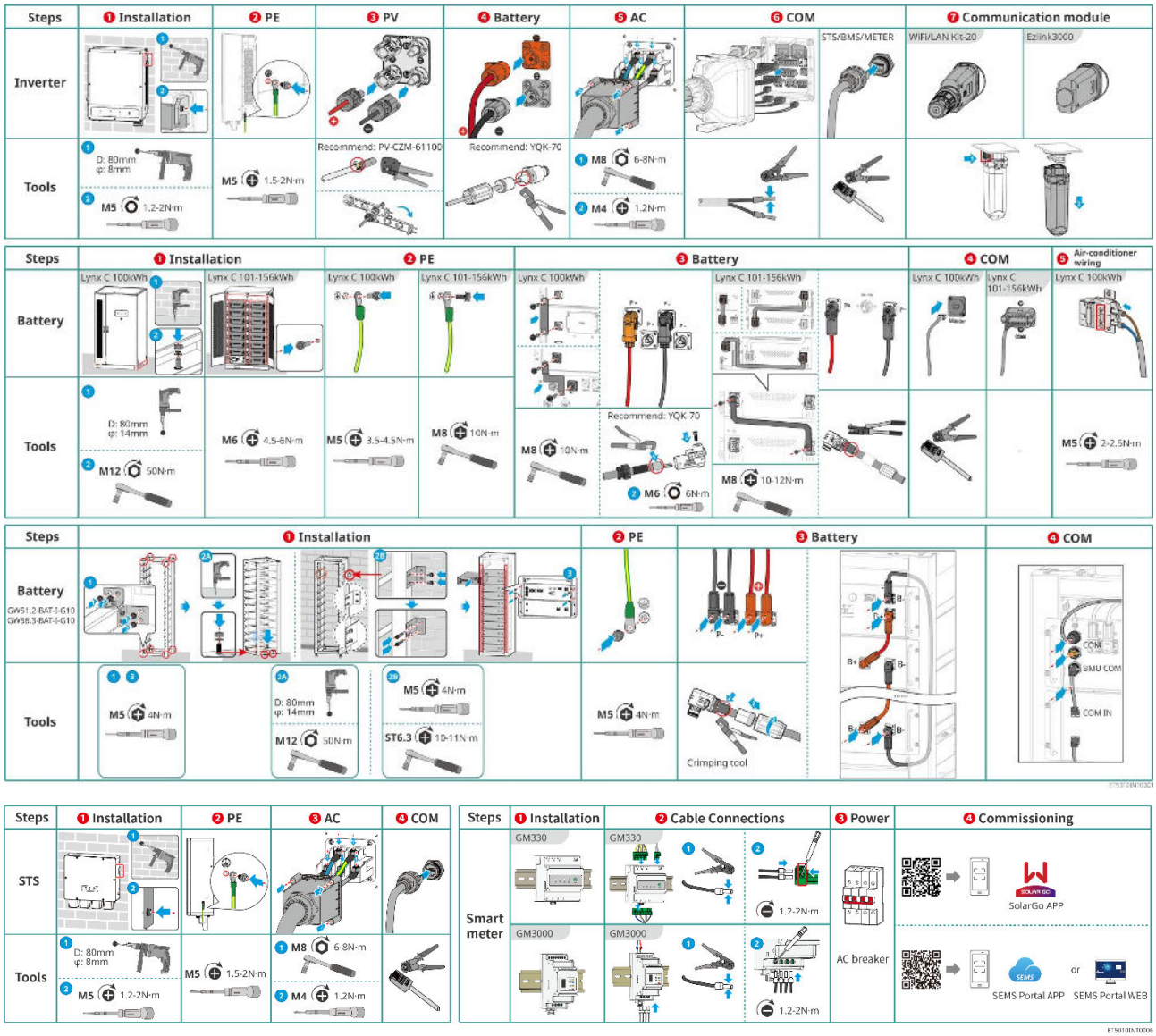

5.2 Installation Requirements

5.2.1 Installation Environment Requirements

1. Do not install the equipment in a place near flammable, explosive, or corrosive materials.
2. The temperature and humidity at the installation site should be within the appropriate range.
3. Do not install the equipment in a place that is easy to touch, especially within children' s reach.
4. 60℃ high temperature exists when the equipment is working. Do not touch the surface to avoid burning.
5. Install the equipment in a sheltered place to avoid direct sunlight, rain, and snow. Build a sunshade if it is needed.
6. The inverter output power may decrease due to direct sunlight or high temperature.
7. The place to install the equipment shall be well-ventilated for heat radiation and large; enough for operations.
8. Check the protection rating of the equipment and ensure that the installation environment meets the requirements.
   - The inverter, battery GW100KWH-D-10, GW100KWH-D-10(Extension), and smart dongle can be installed both indoors and outdoors.
   - Battery LX C 101-10, LX C120-10, LX C138-10, LX C156-10 and smart meter can only be installed indoors.
   - GW51.2-BAT-I-G10, GW56.3-BAT-I-G10 can only be installed indoors and in a ventilated environment.
9. Install the equipment at a height that is convenient for operation and maintenance, electrical connections, and checking indicators and labels.
10. The altitude to install the equipment shall be lower than the maximum working altitude of the system.
11. Consult the manufacturer before installing the equipment outdoors in salt affected areas. A salt affected area refers to the region within 500 meters offshore, and will be related to the sea wind, precipitation and topography.
12. Install the equipment away from electromagnetic interference. If there is any radio or wireless communication equipment below 30MHz near the equipment, you have to:
    - Inverter: add a multi-turn winding ferrite core at the AC output cable of the inverter, or add a low-pass EMI filter.
    - Other equipment: the distance between the equipment and the wireless EMI equipment should be more than 30m.
13. In the event of a fire, please make sure that the carbon dioxide extinguisher or Novec1230 or FM-200 is nearby. The fire cannot be put out by water or ABC dry powder extinguisher. Firefighters are required to wear full protective clothing and self-contained breathing apparatus.
14. The length of the DC and communication cables between battery and inverter should be less than 3m. Please ensure that the installation distance between the inverter and the battery meets the cable length requirements.

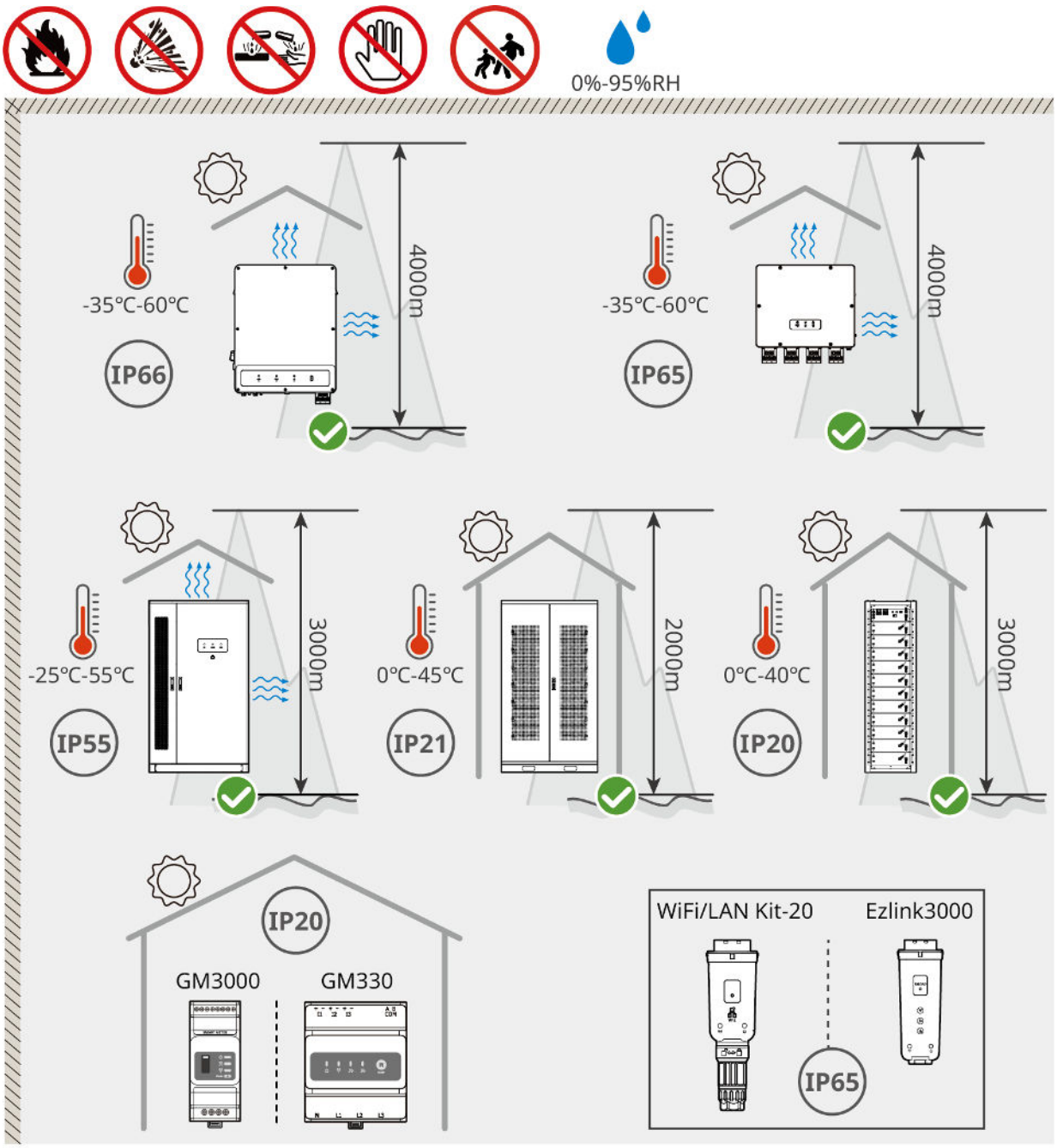

ET5010INT0002

5.2.2 Installation Space Requirements

Reserve enough space for operations and heat dissipation when installing the system.

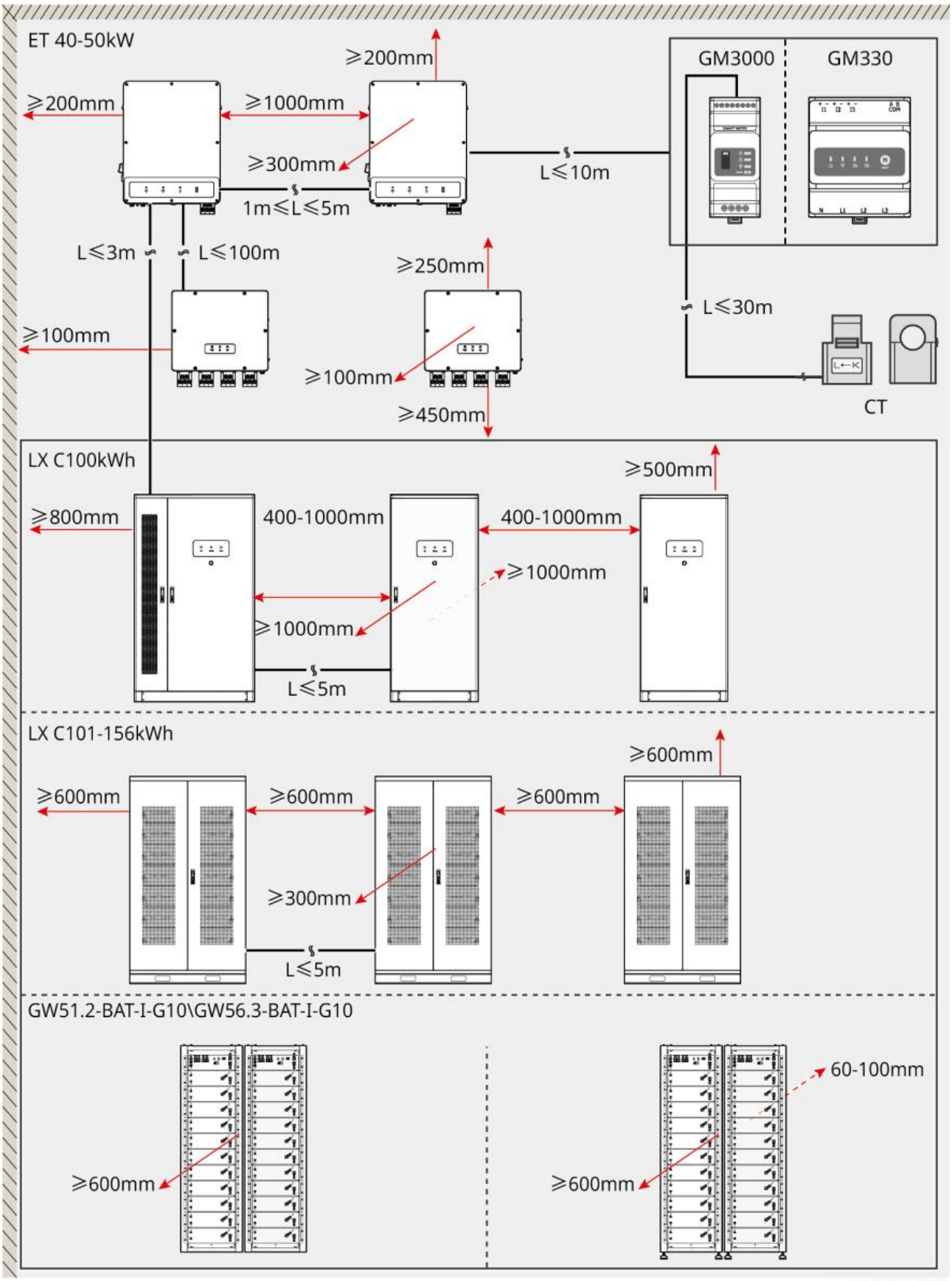

ET5010INT0003

5.2.3 Foundation Requirements

NOTICE
The conduit can be replaced with 4 PVC pipes with a diameter of 125mm according to the site, and there is no need to reserve conduit for indoor environments.

- The installation foundation of the battery system must be flat and dry, without sinking or tilting, and it is strictly prohibited to install it in a water accumulation environment.
- Please ensure that the ground is level and able to support the weight of the battery system.
- The foundation material must be C25 plain concrete hardened ground or other non-combustible surfaces.
- The foundation needs to reserve trenches or outlet holes to facilitate equipment wiring.
- Equipment (including height, pre-embedded expansion screws, conduit, etc.) should be adjusted according to the process and on-site conditions.
- The height of the top mark of the equipment foundation can be adjusted according to the actual needs of the equipment and the site.
- Install the equipment vertically, no tilt or upside down.
- Trench requirement:
  1. If the cable enters to the equipment from bottom, the trench must have dust-proof and rodent proof design to prevent foreign objects from entering.
  2. There must be waterproof and moisture-proof design in the trench to prevent cable aging and short circuit, which may affect the normal operation of equipment.
  3. Due to the thickness of the equipment cables, the trench design needs to fully reserve cable positions to ensure smooth connection and prevent wear and tear.

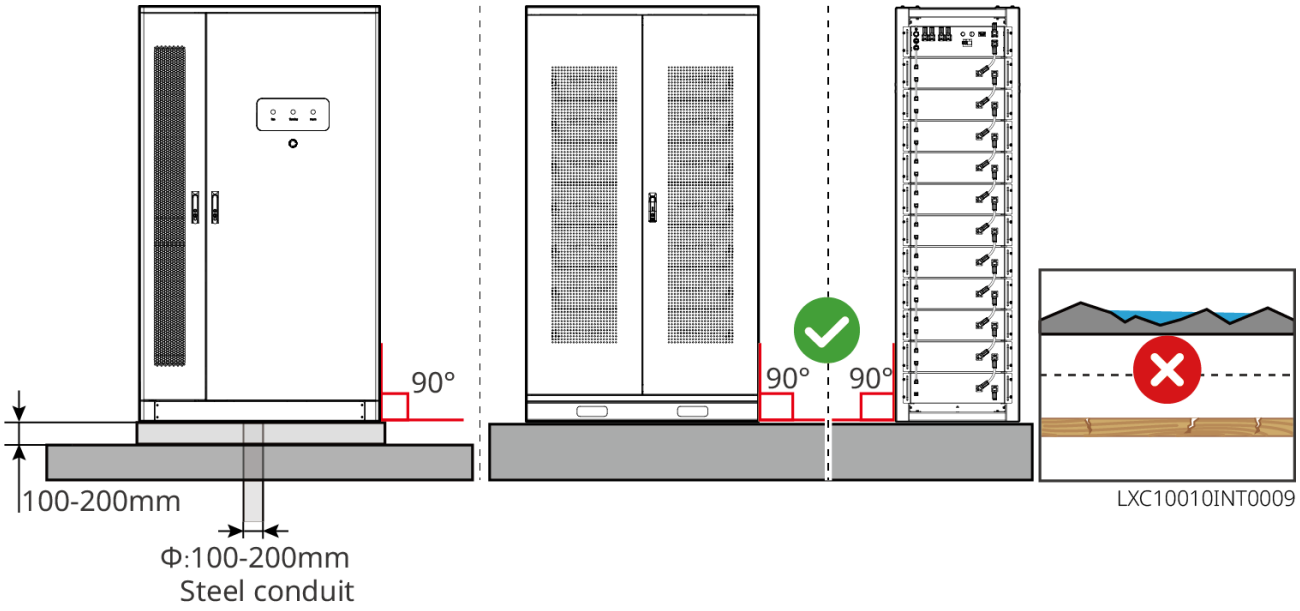

5.2.4 Tool Requirements

NOTICE
The following tools are recommended when installing the equipment. Use other auxiliary tools on site if necessary.

Installation Tools

Tool	Description	Tool	Description
	Diagonal pliers		RJ45 crimping tool
	Wire stripper	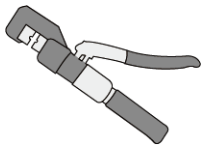	YQK-70 hydraulic pliers
	Adjustable wrench	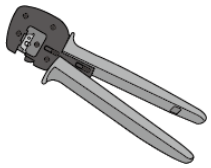	PV connector tool PV-CZM-61100
	Hammer drill (Φ8mm)	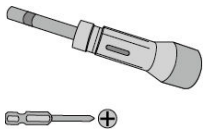	Torque wrench
	Rubber hammer		Socket wrench set
	Marker	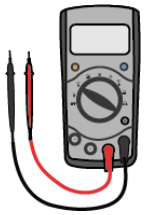	Multimeter Range≤1100V
	Heat shrink tube		Heat gun

	Cable tie		Vacuum cleaner
	Level	-	-

Personal Protective Equipment

Tool	Description	Tool	Description
	Insulation gloves and safety gloves	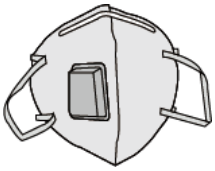	Dust mask
	Goggles		Safety shoes

5.2.5 Transportation Requirements

WARNING

- Operations such as transportation, turnover, installing and so on must meet the requirements of local laws and regulations.
- Move the equipment to the site before installation. Follow the instructions below to avoid personal injury or equipment damage.
  1. Consider the weight of the equipment before moving it. Assign enough personnel to move the equipment to avoid personal injury.
  2. Wear safety gloves to avoid personal injury.
  3. Keep the equipment in balance to avoid its falling down during moving.
  4. Please ensure that the cabinet door is locked during the equipment handling process.
- The energy storage system can be transported to the installation site by lifting or forklift.
- When using lifting methods to transport equipment, please choose flexible slings or straps, and the load-bearing capacity of a single strap should be ≥ 2t.
- When using lifting methods to transport equipment, please choose flexible slings or straps, and the load-bearing capacity of a single strap should be ≥ 2t.

LX C 101-10, LX C120-10, LX C138-10, LX C156-10 forklift transport

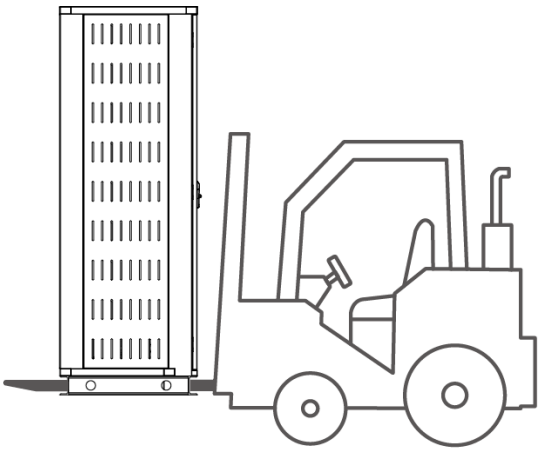

LXC10110INT0001

GW100KWH-D-10, GW100KWH-D-10(Extension):

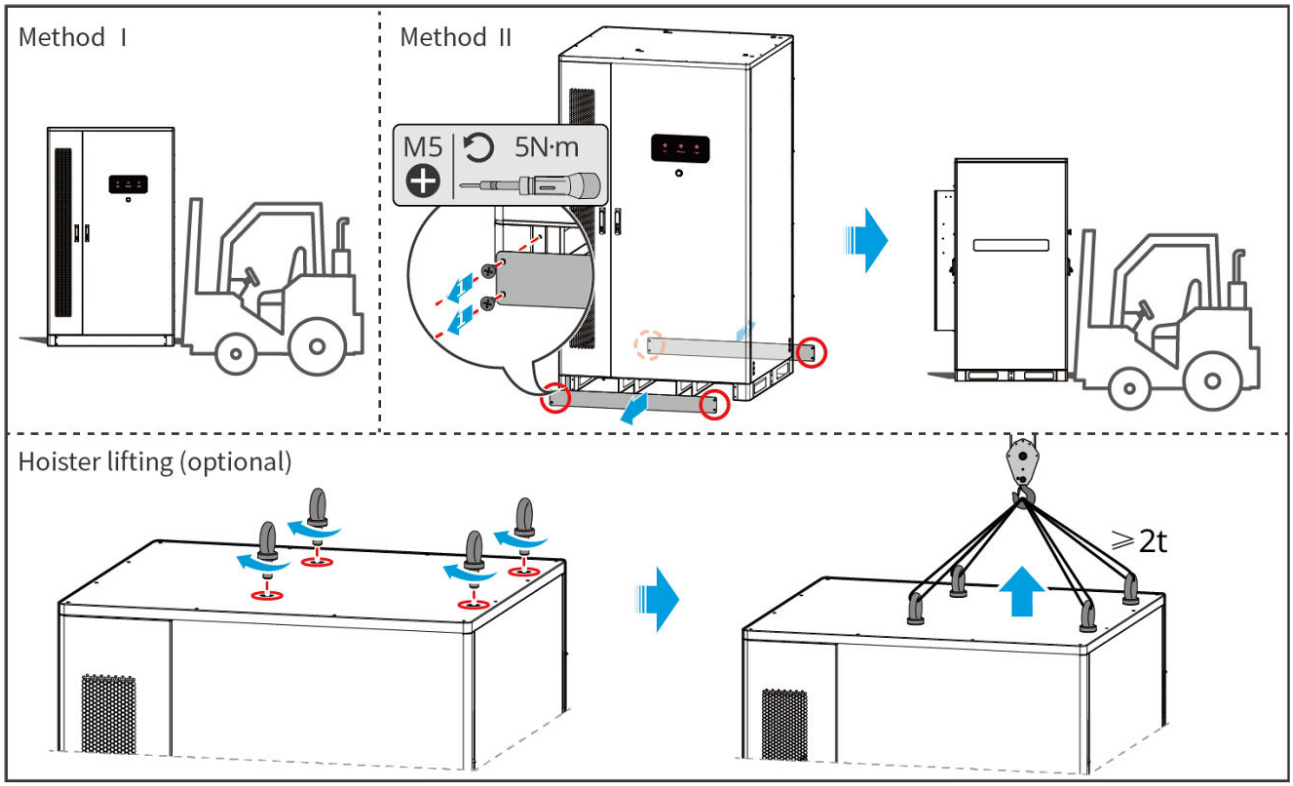

LXC10010INT0001

5.3 Installing the Battery System

WARNING

- Ensure that the ground is flat.
- Ensure that the energy storage system is vertically standing on the ground without risk of inclination.

5.3.1 Open the Cabinet Door

WARNING
● Do not open the cabinet door during equipment transportation. ● After the equipment installation, wiring, and commissioning are completed, please close the cabinet door.

Step 1 Unlock the cabinet door with the key.

Step 2 Rotate the door handle to open the cabinet door.

LX C 101-10, LX C120-10, LX C138-10, LX C156-10

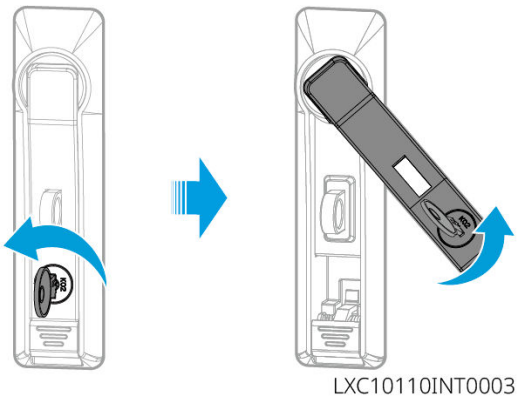

GW100KWH-D-10, GW100KWH-D-10(Extension):

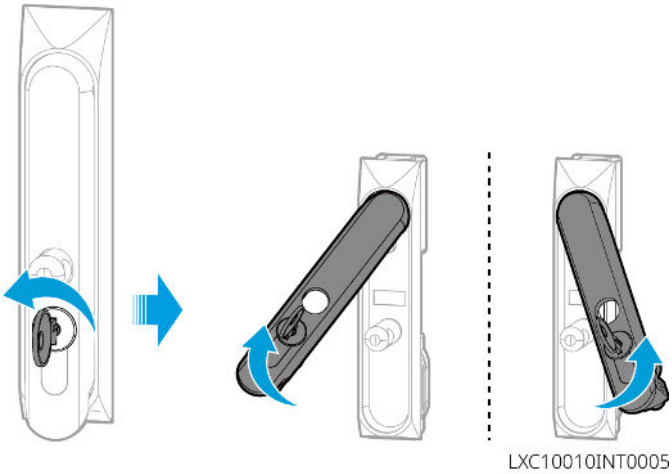

5.3.2 Installing LX C 101-10, LX C120-10, LX C138-10, LX C156-10

Step 1 Open the battery cabinet door and take out the accessory package.

Step 2 Use the hook to move the batteries to the fork lift or elevating devices.

Step 3 Use the fork lift or the elevating devices to install each battery into the battery cabinet from bottom to top. For LX C 101-10 and LX C138-10, do not install any battery on the top layer.

Step 4 Step 4: Use M6 screws to fix the battery and sealing plate (the sealing plate is only used on the top layer for LX C101-10 and LX C138-10).

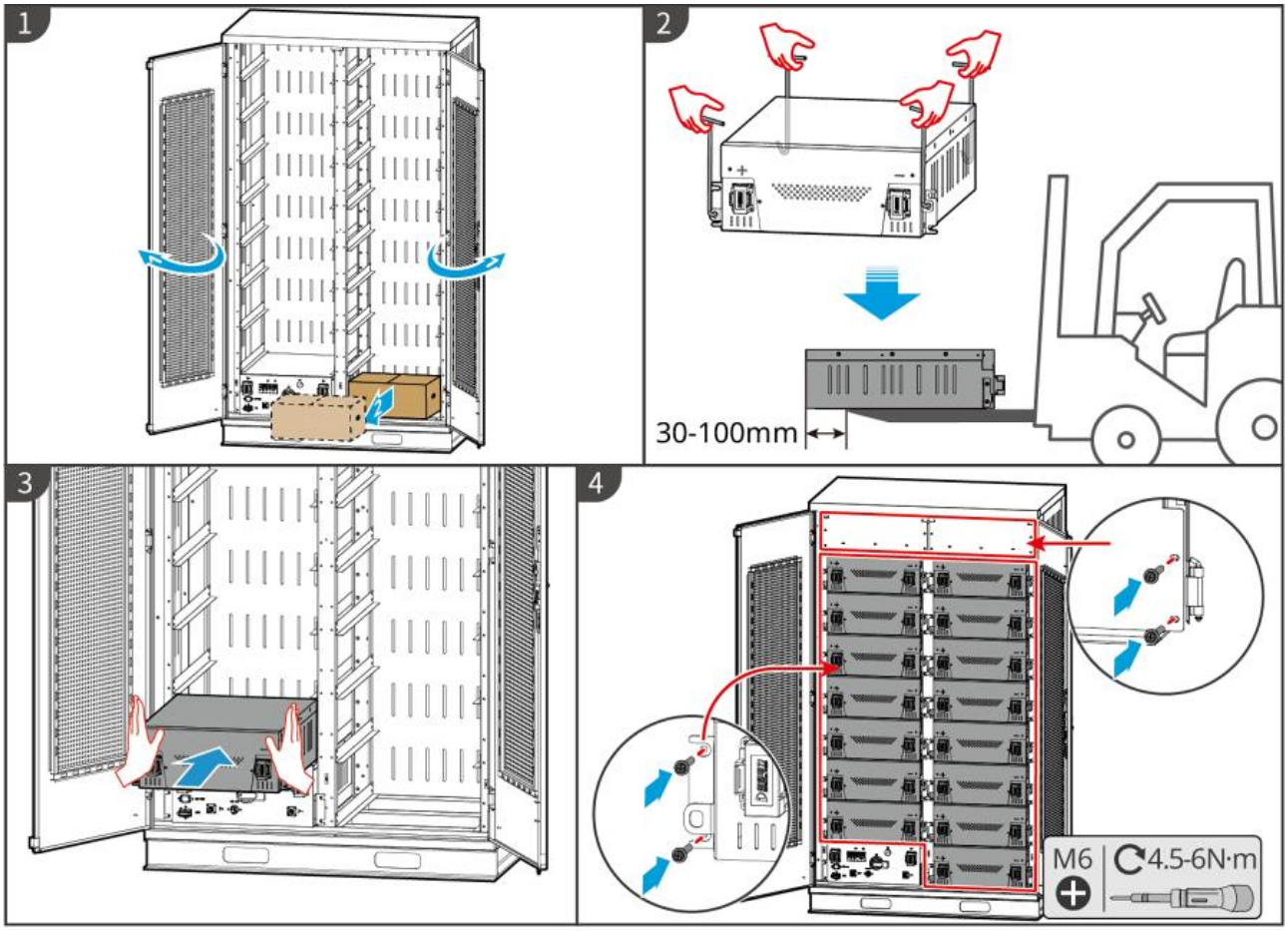

LXC10110INT0002

5.3.3 Installing GW100KWH-D-10, GW100KWH-D-10(Extension)

Step 1 Use a marker pen to mark the location of the punch on level ground.

Step 2 Drill holes with the hammer drill and then install expansion bolts.

Step 3 Transport the energy storage system to the holes location and use a socket wrench to tighten the expansion bolts.

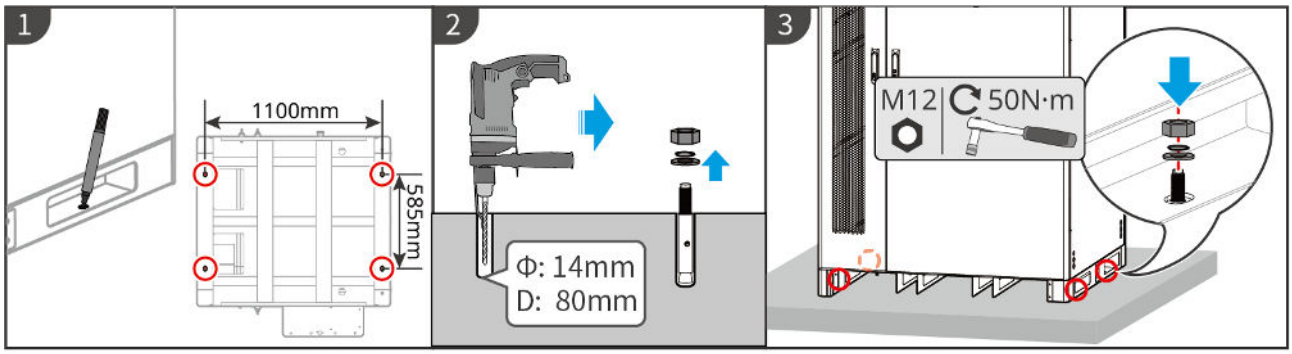

LXC10010INT0004

5.3.4 Installing GW51.2-BAT-I-G10, GW56.3-BAT-I-G10

Assemble the battery rack

Step 1 Lay the rack flat according to the arrow mark and align the holes according to the serial number on the rack.

Step 2 Use M5 screws to fix the round holes and then the waist holes.

Fix the battery rack

Type I

Step 1 Use a marker pen to mark the location of the punch on level ground.

Step 2 Drill holes with the hammer drill and then install expansion bolts.

Step 3 Transport the battery rack to the holes location and use a socket wrench to tighten the expansion bolts.

Type II

Step 1 Lay down the racks and install the ground support at the bottom.

Step 2 Stand up the rack and use the wall support to fix the battery rack to the wall.

Install the PCU and battery pack

Step 1 Use a forklift or man power to move the PCU and battery packs, and push them into the rack.

Step 2 Attach name plate and use M5 screws to fasten the PCU and battery pack to the rack.

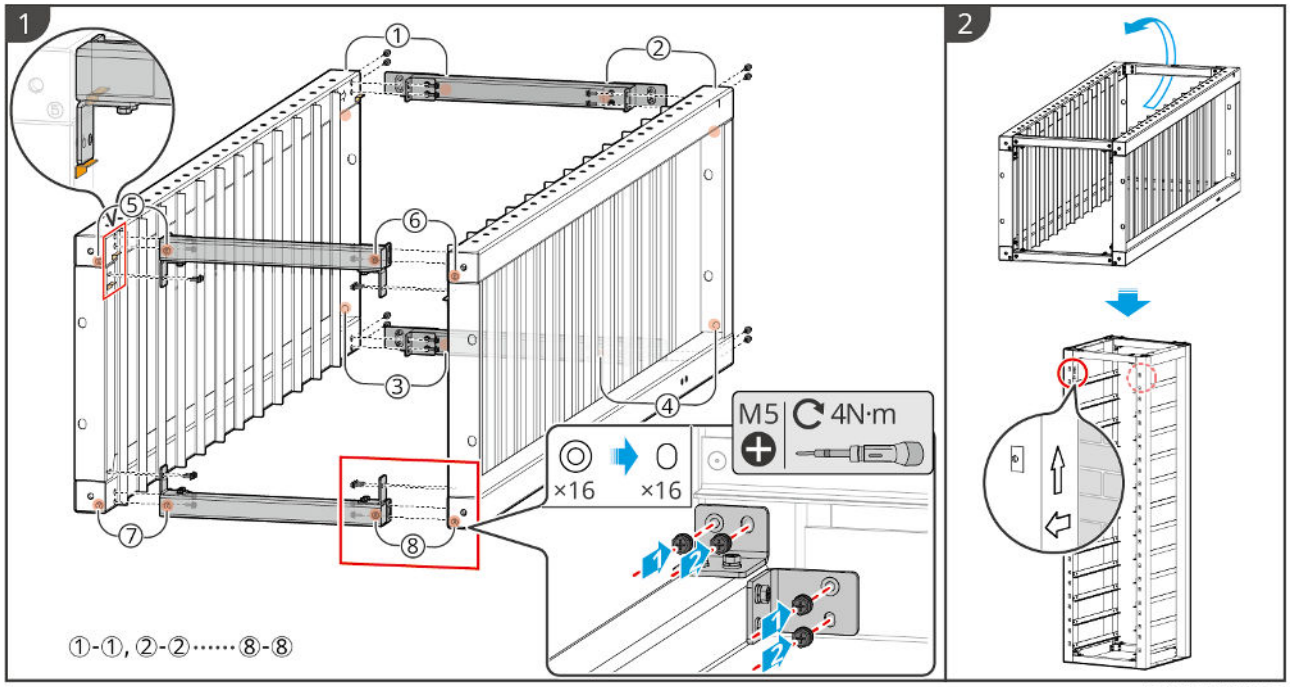

BAT10INT0001

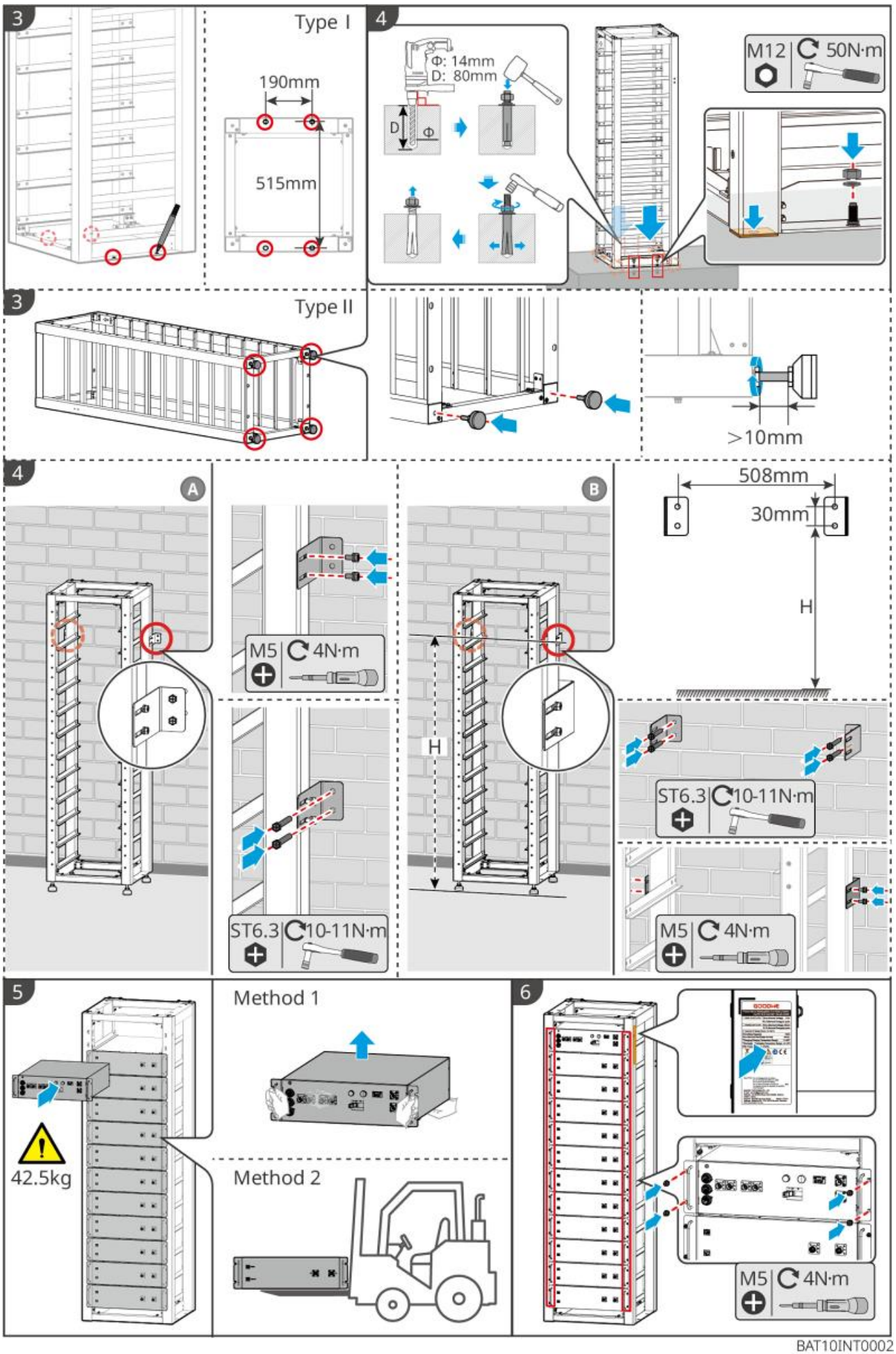

BAT10INT0002

5.4 Installing the Inverter

⚠CAUTION

- Avoid the water pipes and cables buried in the wall when drilling holes.
- Wear goggles and a dust mask to prevent the dust from being inhaled or contacting eyes when drilling holes.
- Make sure the inverter is firmly installed in case of falling down.

Step 1 Put the plate on the wall horizontally and mark positions for drilling holes.

Step 2 Drill holes with the hammer drill.

Step 3 Use the expansion bolts to fix the inverter on the wall. If it is suitable for the installation of GW100KWH-D-10 battery system, fix the inverter mounting plate bracket on the AC unit mounting rack of the battery system.

Step 4 Open the inverter handle. If additional handles need to be installed, please contact the after-sales service center for assistance.

Step 5 Install the inverter on the mounting plate and fix it. Only one side of the inverter and the back plate shall be fixed to ensure that the inverter is installed firmly. Only for Australia: Secure the DC switch with the DC switch lock, ensuring that the DC switch is "OFF" during installation.

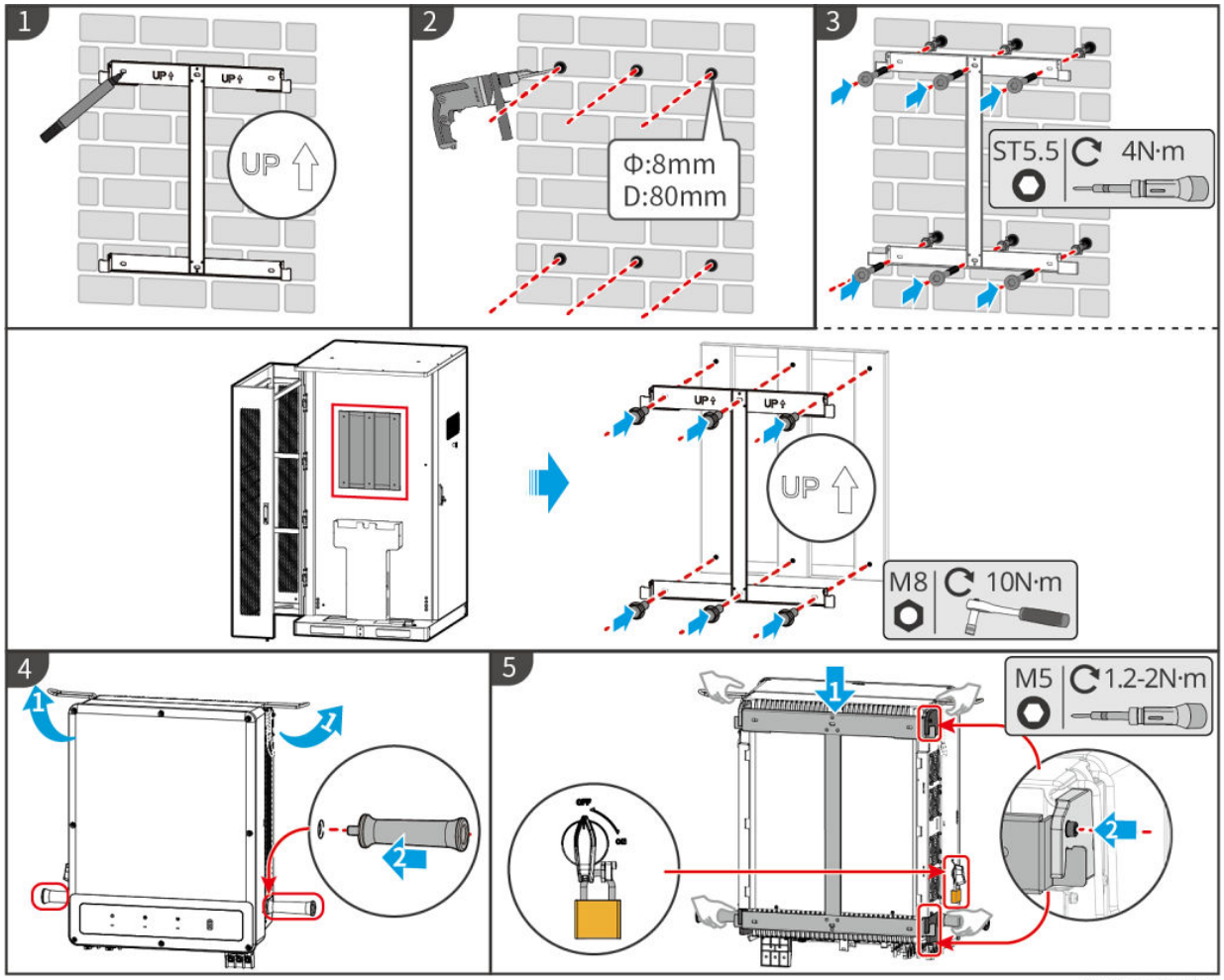

ET5010INT0004

5.5 Installing the STS

Step 1 Put the plate on the wall horizontally and mark positions for drilling holes.

Step 2 Drill holes with the hammer drill.

Step 3 Use the expansion bolts to fix the mounting plate on the wall.

Step 4 Install the STS on the mounting plate.

Step 5 Tighten the STS with mounting plate to make sure the safe installation of STS.

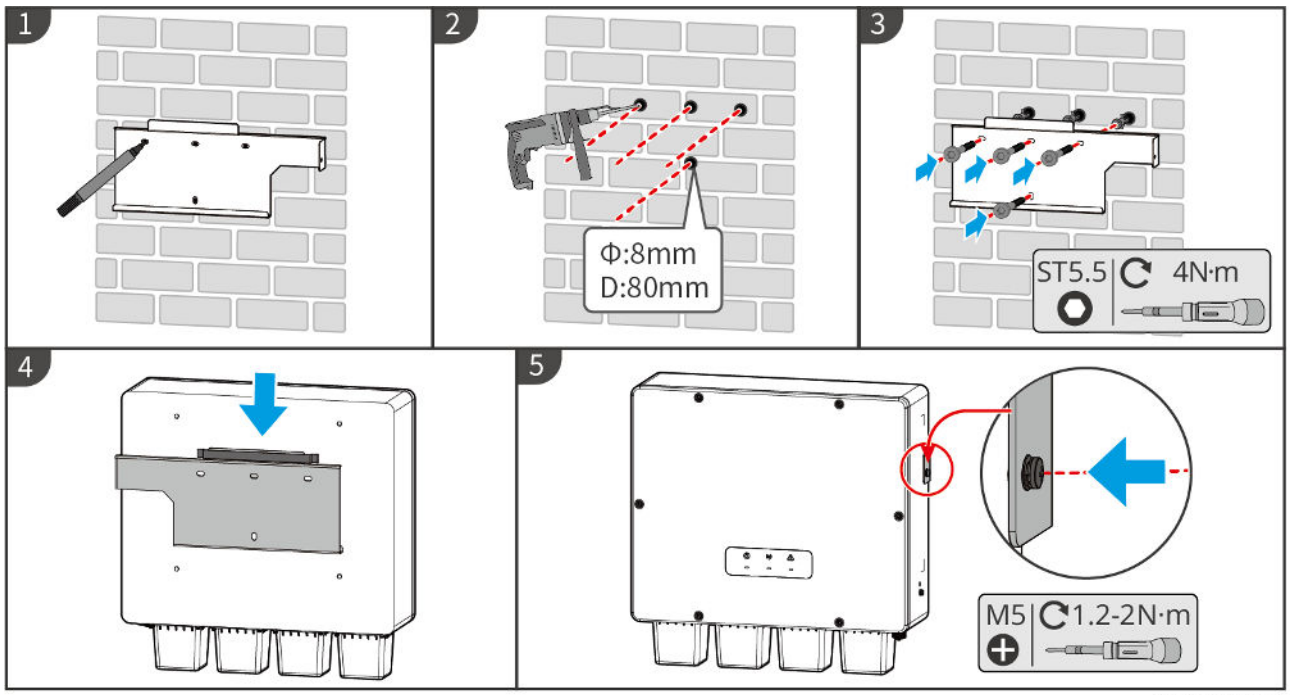

STS10INT0001

5.6 Installing the Smart Meter

WARNING
In areas at risk of lightning, if the meter cable exceeds 10m and the cables are not wired with grounded metal conduits, you are recommended to use an external lightning protection device.

GM330

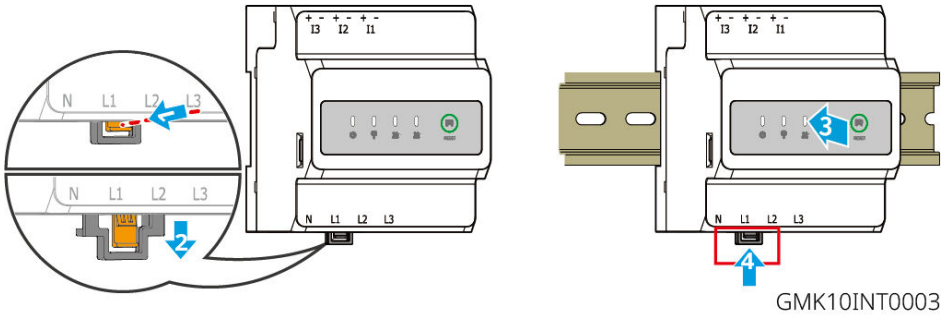

GM3000

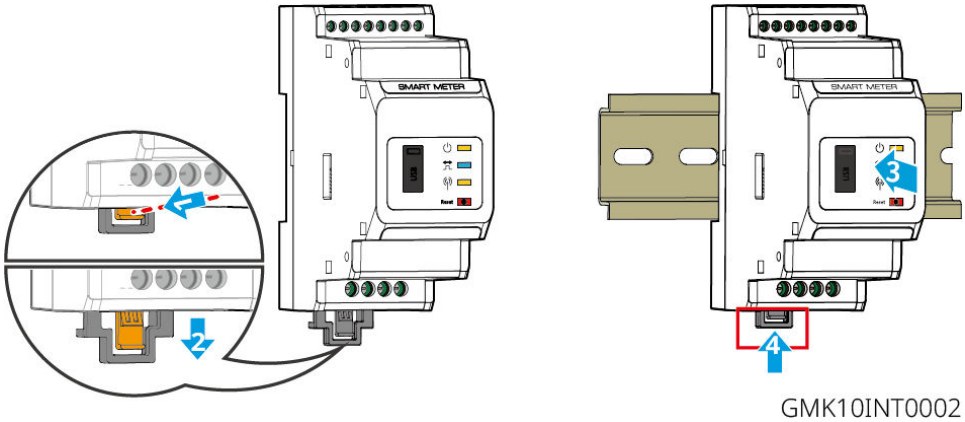

6 System Wirings

DANGER

- Perform electrical connections in compliance with local laws and regulations. Including operations, cables, and component specifications.
- Disconnect the DC switches and the AC output switches to power off the equipment before any electrical connections. Do not work with power on. Otherwise, an electric shock may occur.
- When the energy storage system is powered on, the BACK-UP AC port is energized. Power off the inverter first if maintenance is required on the BACK-UP loads. Otherwise, it may cause electric shock.
- Tie the same type cables together, and place them separately from cables of different types. Do not place the cables entangled or crossed.
- If the cable bears too much tension, the connection may be poor. Reserve a certain length of the cable before connecting it to the Inverter cable port.
- Make sure that the cable conductor is in full contact with the terminal and the cable insulation; part is not crimped with the terminal when crimping the terminal. Otherwise, the device may; not be able to work properly, or the connection may be unreliable during working, which; may cause terminal block damage, etc.

WARNING

- Do not connect loads between the inverter and the AC switch directly connected to the inverter.
- Install one AC output circuit breaker for each inverter. Multiple inverters cannot share one AC circuit breaker.
- An AC circuit breaker shall be installed on the AC side to make sure that the inverter can safely disconnect the grid when an exception happens. Select the appropriate AC circuit breaker in compliance with local laws and regulations.
- The Back-UP function of the inverter needs to be implemented with an STS.

NOTICE

- Wear personal protective equipment like safety shoes, safety gloves, and insulating gloves during electrical connections.
- All electrical connections should be performed by qualified professionals.
- Cable colors in this document are for reference only. The cable specifications shall meet

local laws and regulations.

6.1 System Wiring Diagram

NOTICE

- N and PE wiring of ON-GRID and BACK-UP ports are different based on the regulation requirements of different regions. Refer to the specific requirements of local regulations.
- The inverter can only use the BACK-UP function when working with STS. The ON-GRID and ACK-UP ports are located on the STS device.
- STS has a built-in relay in the ON-GRID AC port. When the energy storage system is in the off-grid mode, the built-in ON-GRID relay is open; while when the inverter is in grid-tied mode, it is closed.
- When the energy storage system is powered on, the BACK-UP AC port is energized. Power off the inverter first if maintenance is required on the BACK-UP loads. Otherwise, it may cause electric shock.

N and PE cables are connected together in the Main Panel for wiring.

NOTICE

- To maintain neutral integrity, the neutral cable of ON-GRID side and BACK-UP side must be connected together, otherwise BACK-UP function will not work.
- The following diagram is applicable to areas in Australia and New Zealand.

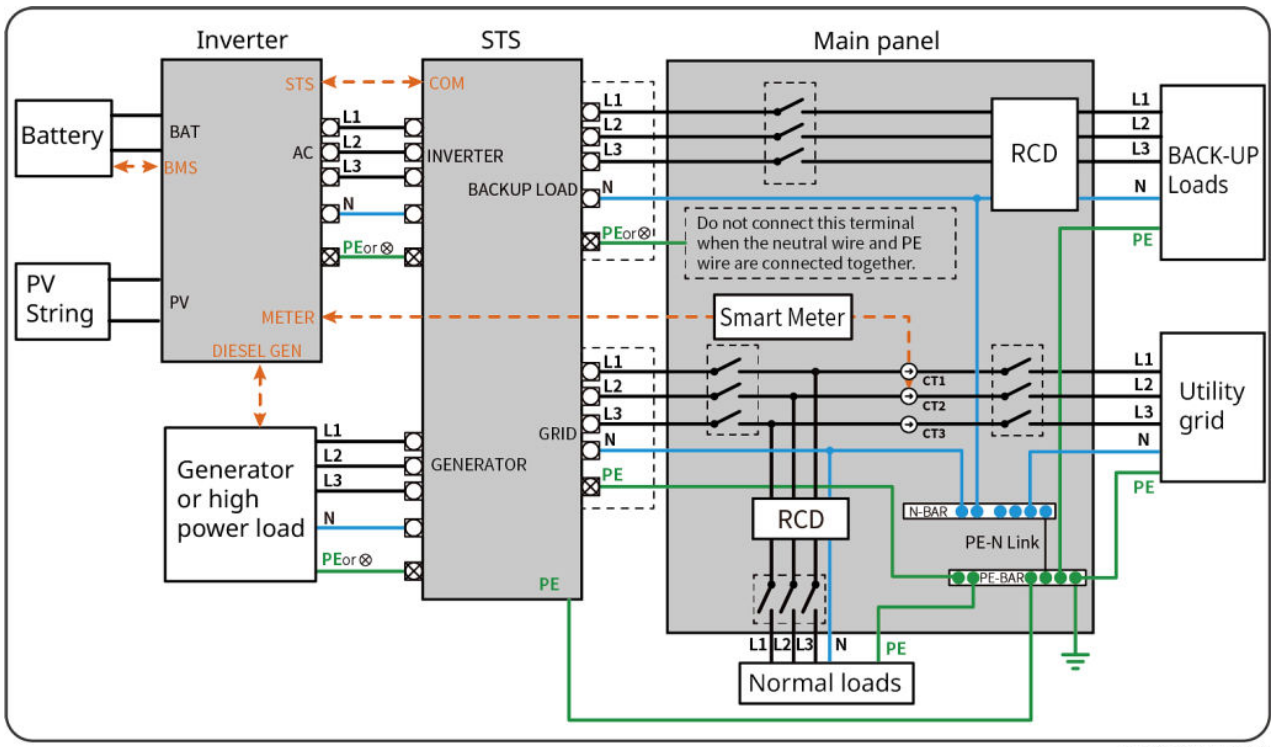

N and PE cables are separately wired in the Main Panel.

NOTICE
If the inverter is switched to off grid mode and there is no need to connect the N and PE cables, this function can be set through the "Advanced Settings" interface of the SolarGo APP's "Backup N and PE Relay Switch". The following diagram is applicable to areas except Australia or New Zealand.

- In Germany, the internal relay will automatically connect the N wire and PE cable in back-up mode within 100ms and automatically disconnect in on-grid mode.
- In areas other than Germany, the internal relay is disconnected by default in either mode.

- When the inverter switches to off grid mode, the STS internal relay automatically connects, connecting the PE and N cables.
- When the inverter switches to grid connection mode, the STS internal relay automatically disconnects, disconnecting the PE and N cables.

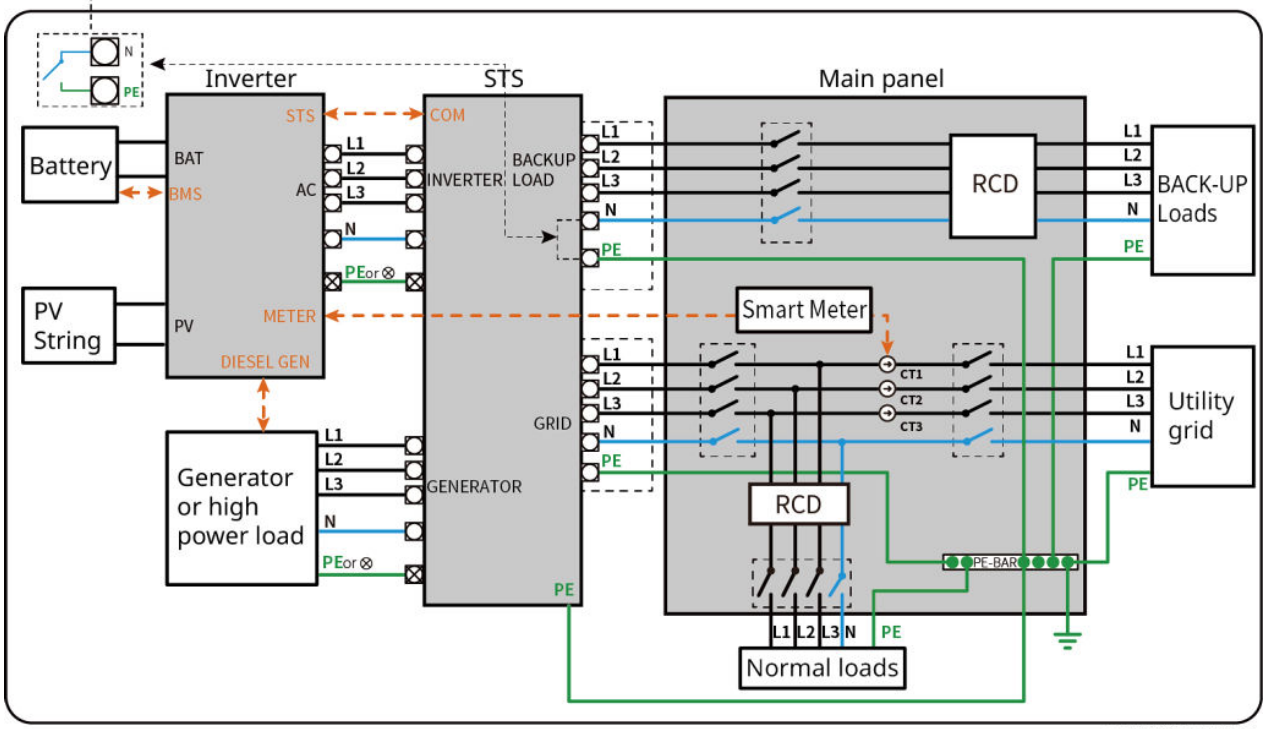

ET5010NET0011

6.2 Detailed System Wiring Diagram

6.2.1 Detailed System Wiring Diagram for Single Inverter

- In single inverter system, the inverter uses WiFi/LAN Kit-20 smart dongle.
- In single inverter system, GM330 smart meter is standard and GM3000 smart meter is optional.
- The single inverter system with STS has UPS level on/off-grid switching function, with a switching time of less than 10ms. Please ensure that the total capacity of the BACK-UP load is less than the total rated power of the inverter, otherwise, it may result in functional failure during power outages in the grid.
- The power of the connected generators should be ≤ 1.1 x the total rated power of the inverter.

Single inverter, on-grid, without BACK-UP function

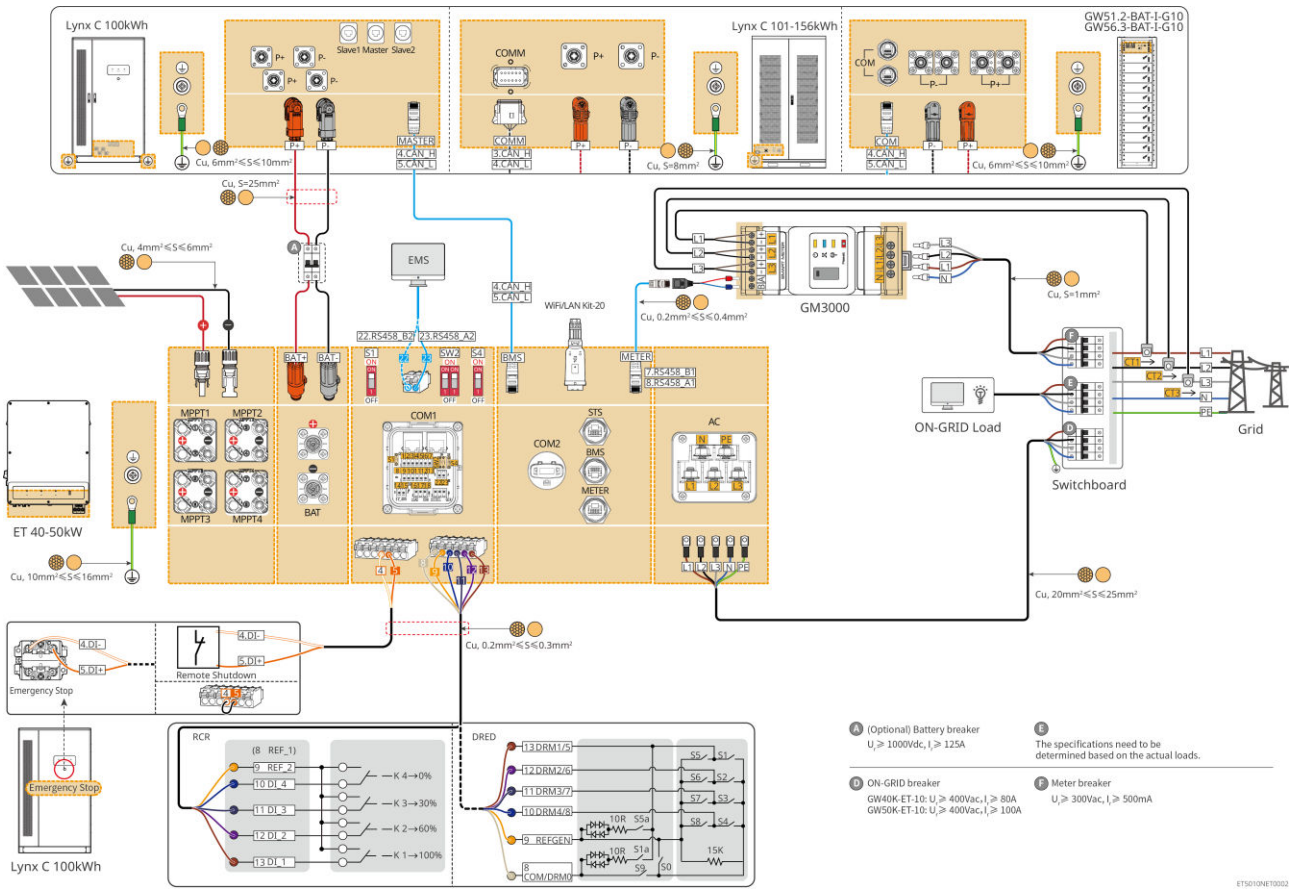

Single inverter, on-grid/off-grid, with BACK-UP function

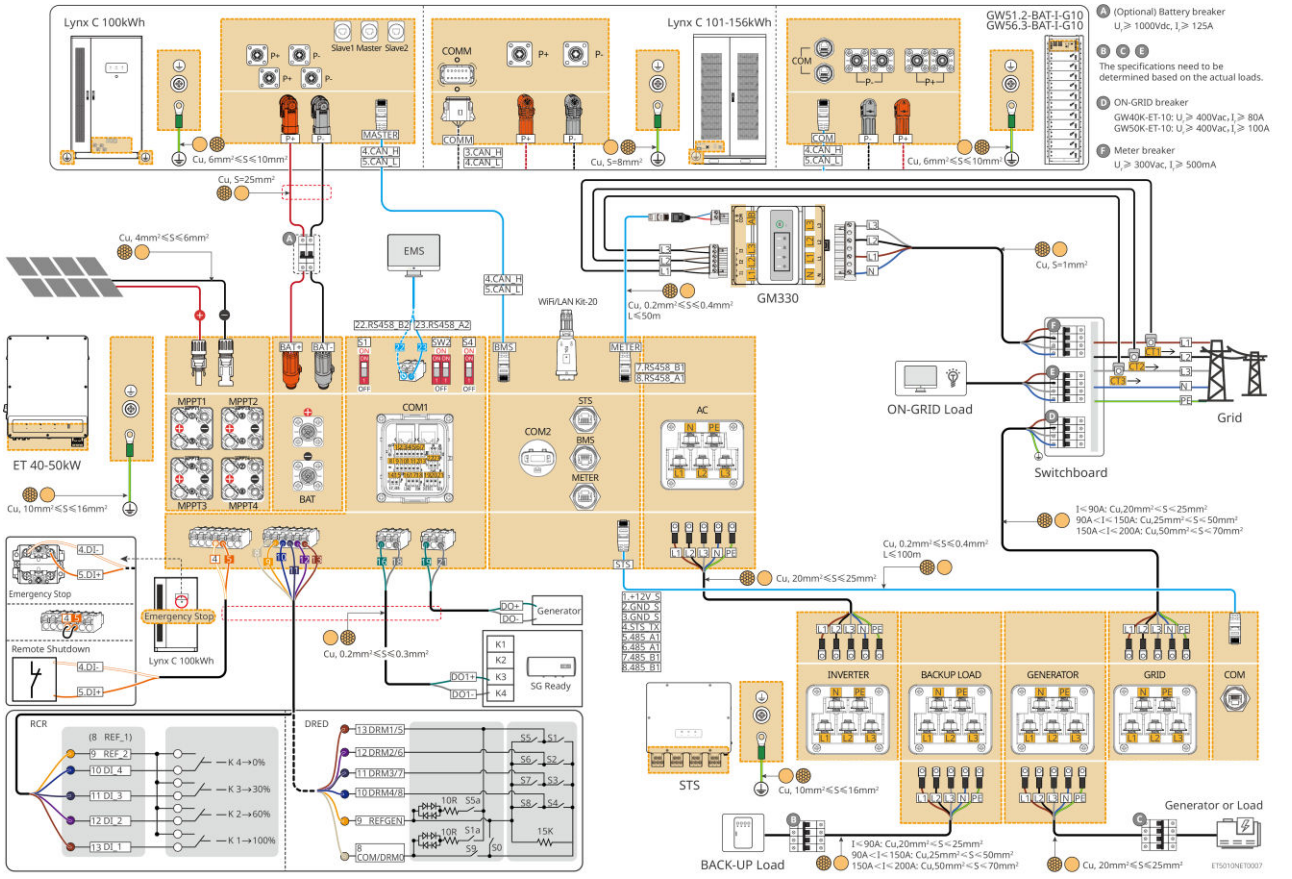

6.2.2 Detailed System Wiring Diagram for Parallel System

- In parallel scenario, the inverter connecting to Ezlink3000 and smart meter is considered as the master inverter, while all the others are slave inverters. Do not connect any smart dongle to the slave inverters.
- The inverter parallel system with STS has UPS level on/off-grid switching function.
  - When the energy storage system is in grid-tied state and connected in parallel, or in off-grid state and not connected in parallel, the on/off-grid switching time is less than 10ms. Please ensure that the capacity of the BACK-UP load connected to each STS is less than the nominal power of the inverter connected to the corresponding STS; otherwise, it may result in functional failure during power outages in the grid.
  - When the energy storage system is in grid-tied state and connected in parallel, or in off-grid state and connected in parallel, the on/off-grid switching time is less than 20ms. Please ensure that the total capacity of the BACK-UP load is less than 0.9 x the total rated power of the inverter; otherwise, it may result in functional failure during power outages in the grid.
- Please use GM330 smart meter in inverter parallel system.
- Devices like DRED device, RCR device, remote shutdown device, SG Ready heat pump should be connected to the master inverter.
- In inverter parallel system, the total power of the connected generators should be ≤ 1.1 x the total rated power of the inverter.
- The following diagram mainly introduces parallel connections. For other port connections, refer to the single system.

Inverter parallel system, grid-tied, without BACK-UP function

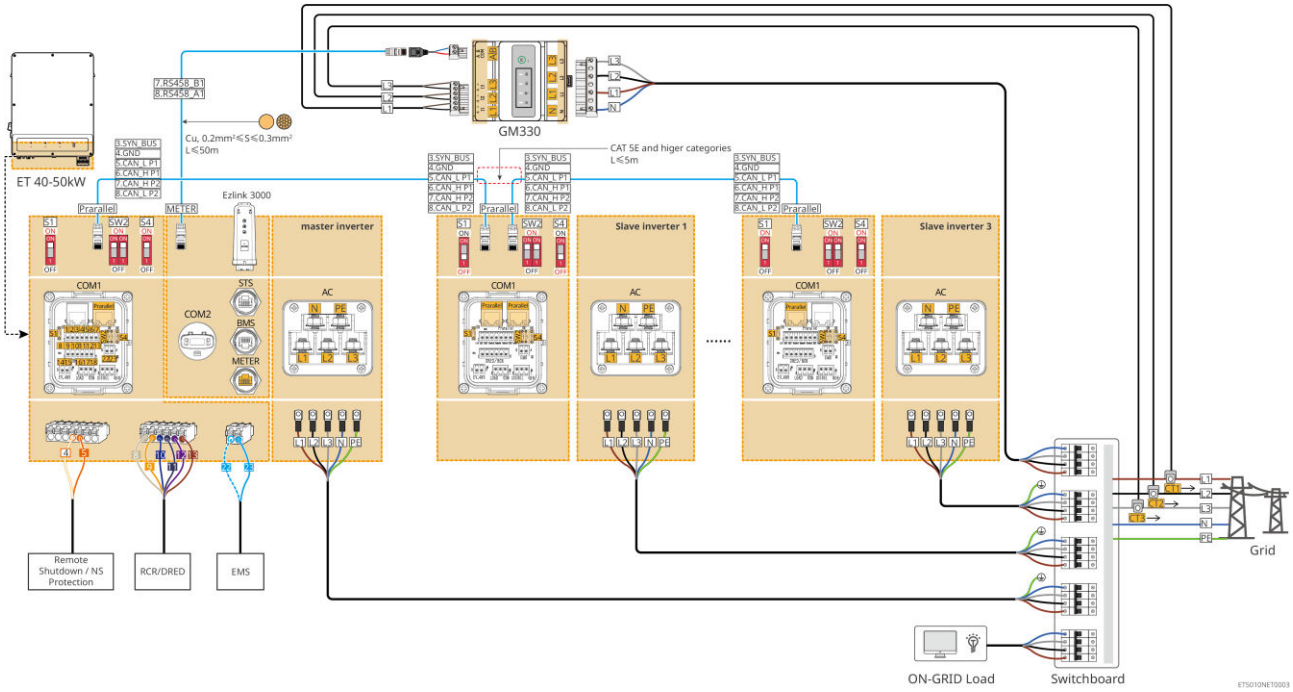

Inverter parallel system, with BACK-UP function, grid-tied and connected in parallel, and off-grid not connected in parallel

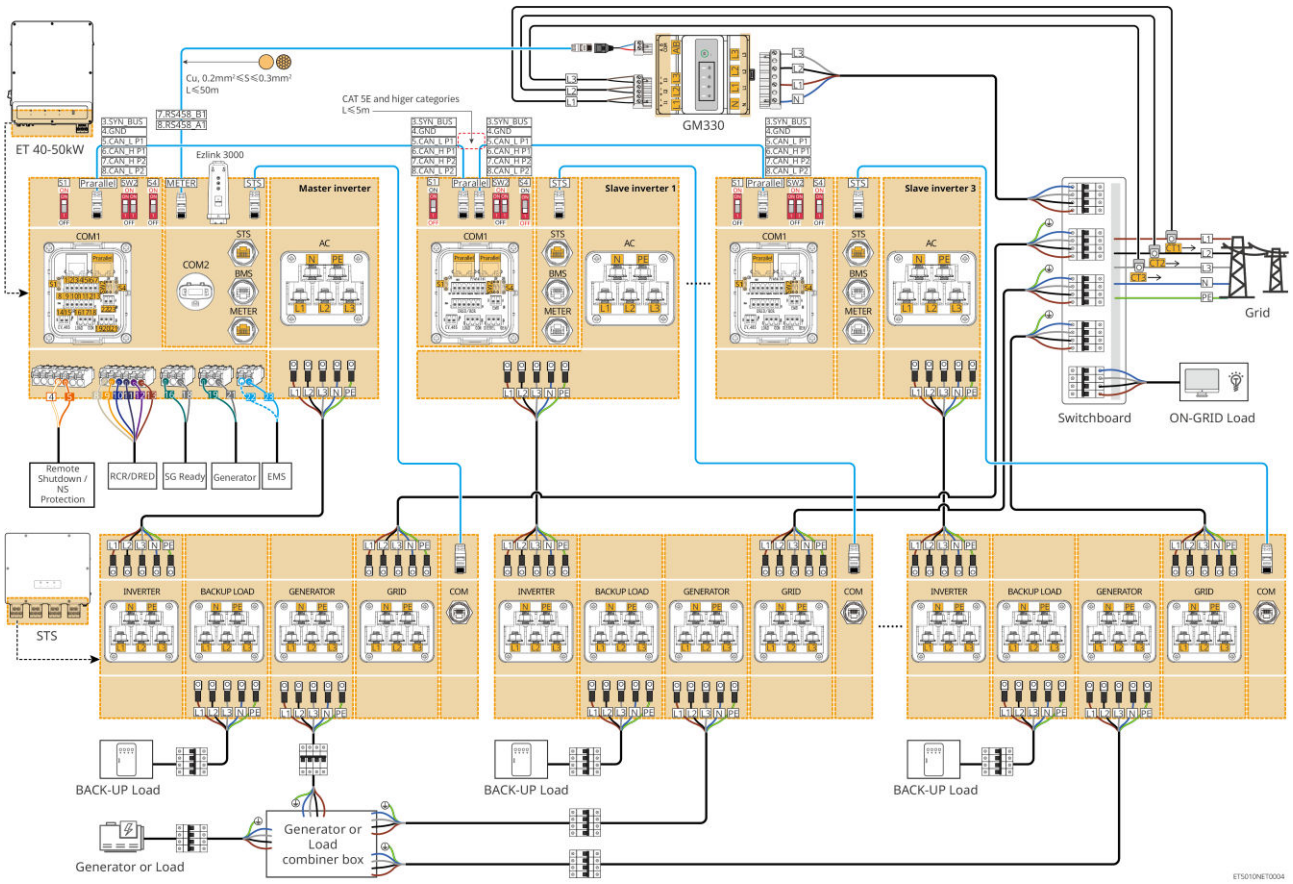

Inverter parallel system, with BACK-UP function, grid-tied and connected in parallel, off-grid and connected in parallel

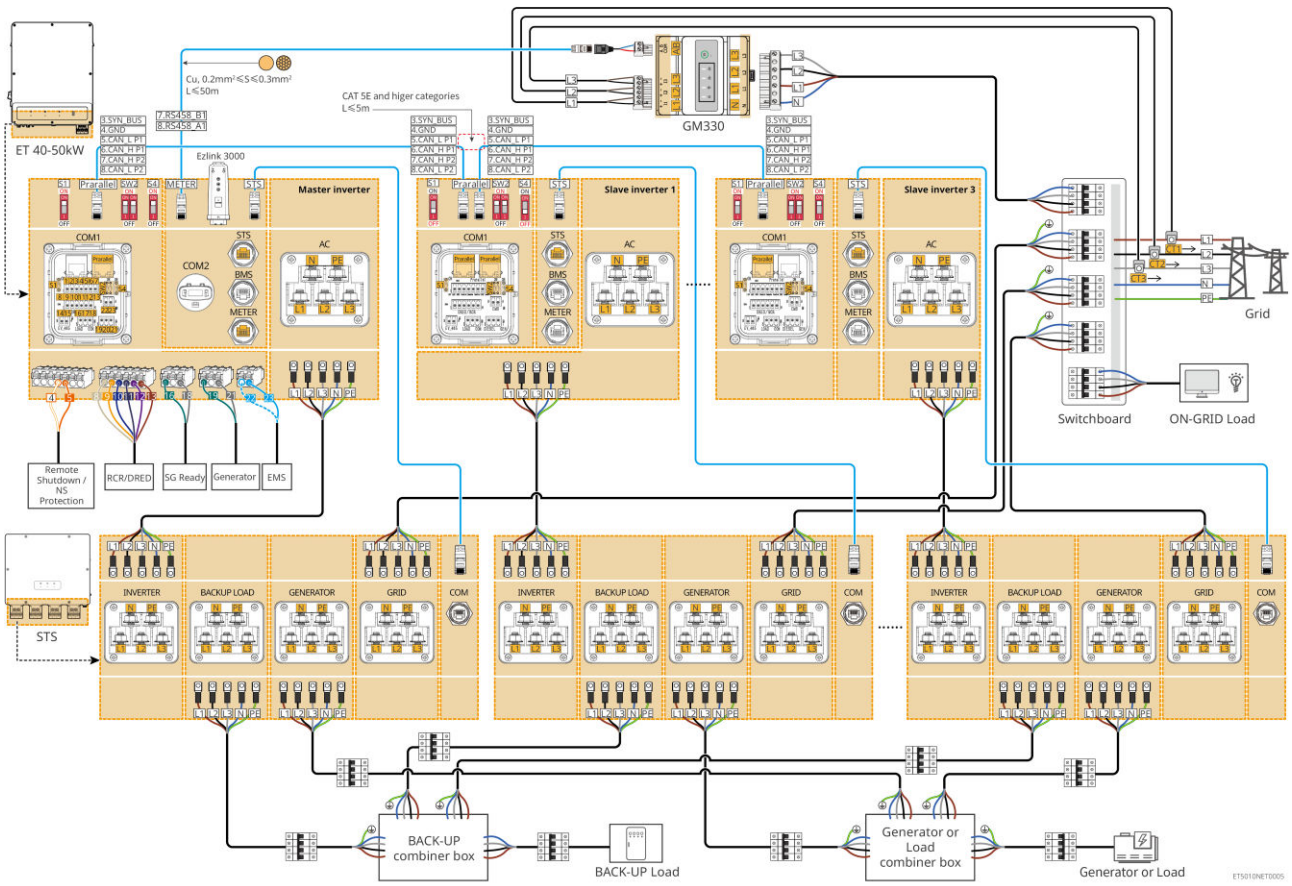

6.3 Preparing Materials

6.3.1 Preparing Breakers

No.	Circuit breaker	Recommended specifications	Source
1	ON-GRID breaker BACK-UP circuit breaker Generator circuit breaker	Nominal voltage ≥ 400V, nominal current: ● GW40K-ET-10: Nominal current ≥80A ● GW50K-ET-10: Nominal current ≥100A	Prepared by customers.
2	Battery breaker	Optional in compliance with local laws and regulations ● 2P DC breaker ● Nominal current ≥125A ● Nominal Voltage≥ 1000V	Prepared by customers.
3	RCD	Optional in compliance with local laws and regulations ● Type A	Prepared by customers.

		• ON-GRID RCD: 500mA • BACK-UP RCD: 30mA	
4	Smart meter breaker	• Nominal Voltage: 380V/ 400V • Nominal current: 0.5A	Prepared by customers.
5	Load breaker	Depend on the actual using load	Prepared by customers.
6	(Optional)Bypass switch		

6.3.2 Preparing Cables

No.	Cable	Recommended specifications	Source
1	Inverter, STS PE cable	• Single-core outdoor copper cable • Conductor cross-sectional area: 10mm²- 16mm²	Prepared by customers.
2	Battery PE cable LX C101-10, LX C120-10, LX C138-10, LX C156-10	• Single-core outdoor copper cable • Conductor cross-sectional area: 8mm²	Prepared by customers.
	Battery PE cable GW100KWH-D-10, GW100KWH-D-10(Extension)	• Single-core outdoor copper cable • Conductor cross-sectional area: 6mm²-10mm²	Prepared by customers.
	Battery PE cable GW51.2-BAT-I-G10 GW56.3-BAT-I-G10	• Single-core outdoor copper cable • Conductor cross-sectional area: 6mm²-10mm²	Prepared by customers.
3	PV DC cable	• Commonly used outdoor photovoltaic cable • Conductor cross-sectional area: 4mm²-6mm² • Outer diameter: 4mm-5mm	Prepared by customers.
4	Battery DC cable	• Single-core outdoor copper cable	• LX C 101-10, LX

		● Conductor cross-sectional area: 25mm² ● Outer diameter: 6.5mm-8.5mm	C120-10, LX C138-10, LX C156-10: Prepared by customers. ● GW100KWH-D-10 and GW100KWH-D-10 (Extension): delivered with battery system
	Battery DC cable 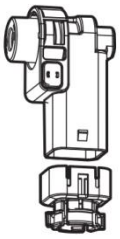	● Single-core outdoor copper cable ● Conductor cross-sectional area: 25mm² ● Outer diameter: 6.5mm-8.5mm	
	Battery DC cable GW51.2-BAT-I-G10 GW56.3-BAT-I-G10	● Single-core outdoor copper cable ● Conductor cross-sectional area: 25mm² ● Outer diameter: 6.5mm-10.5mm	Prepared by customers.
5	Battery DC cable（For parallel connection） GW100KWH-D-10, GW100KWH-D-10(Extension)	● Single-core outdoor copper cable ● Conductor cross-sectional area: 35mm²/2AWG ● Outer diameter: 10mm-12mm	Prepared by customers.
	Battery DC cable（For parallel connection） LX C101-10, LX C120-10, LX C138-10, LX C156-10	● Single-core outdoor copper cable ● Conductor cross-sectional area: 35mm²/2AWG ● Outer diameter: 10mm-12mm	Prepared by customers.
	Battery DC cable（For parallel connection） GW51.2-BAT-I-G10 GW56.3-BAT-I-G10	● Single-core outdoor copper cable ● Conductor cross-sectional area: 25mm² ● Outer diameter: 6.5mm-8.5mm	Prepared by customers.
6	Inverter AC cable Generator AC cable	● Single-core outdoor copper cable ● Conductor cross-sectional area: 20mm²- 25mm² ● Outer diameter: 18-38mm	Prepared by customers.

7	BACK-UP AC cable ON-GRID AC cable	● Multi core outdoor copper core cable, recommended to use YJV or RVV five core cable* ● When the output current of the BACKUP LOAD port or the input/output current of the GRID port is less than 90A: ○ Conductor cross-sectional area: 20mm²- 25mm² ○ Outer diameter: 18-38mm ● When the output current of the BACKUP LOAD port or the input/output current of the GRID port is greater than 90A and less than or equal to 150A: ○ Conductor cross-sectional area: 25mm²- 50mm² ○ Outer diameter: 18-38mm ● When the output current of the BACKUP LOAD port or the input/output current of the GRID port is greater than 150A and less than or equal to 200A: ○ Conductor cross-sectional area: 50mm²- 70mm² ○ Outer diameter: 32-38mm	Prepared by customers.
8	Smart meter power cable	Outdoor copper cable Conductor cross-sectional area: 1mm²	Prepared by customers.
9	BMS communication cable	Customized communication cable	Shipped with device
10	Smart meter RS485 communication cable	Standard network cable: CAT 5E or higher categories net cable with RJ45 connector.	RJ45-2PIN adapter and standard net cable: included in the package of the inverter.
11	Communication cable for battery parallel connection	Customized communication cable	Contact GOODWE to purchase

	LX C101-10, LX C120-10, LX C138-10, LX C156-10		
	Communication cable for battery parallel connection GW100KWH-D-10, GW100KWH-D-10(Extension)	CAT 5E or higher categories, EIA/TIA 568B standard net cable with RJ45 connector	Prepared by customers.
	Communication cable for battery parallel connection GW51.2-BAT-I-G10 GW56.3-BAT-I-G10	CAT 5E or higher categories, EIA/TIA 568B standard net cable with RJ45 connector	Prepared by customers.
12	DO communication cable for load control	● Shielded cable that meet local requirements ● Conductor cross-sectional area: 0.2mm²- 0.4mm² ● Outer diameter: 5mm-8mm	Prepared by customers.
13	Communication cable for generator control		
14	Remote shutdown communication cable		
15	RSD communication cable		
15	RCR/DRED communication cable		
16	(Reserved) DO Dry contact LX C101-10, LX C120-10, LX C138-10, LX C156-10		

17	(Reserved) DO Dry contact GW51.2-BAT-I-G10 GW56.3-BAT-I-G10	● Shielded cable that meet local requirements ● Conductor cross-sectional area: 0.2mm²- 1mm² Outer diameter: 5mm-14mm	Prepared by customers.
18	Communication cable for parallel connected inverters	● CAT 5E or higher categories standard net cable with RJ45 connector, and the length should be less than 5m ● CAT 7E or higher categories standard net cable with RJ45 connector, and the length should be less than 10m	Prepared by customers.
19	EMS RS485 communication cable	● Shielded twisted pair cable that meet local requirements ● Conductor cross-sectional area: 0.2mm²- 0.4mm² ● Outer diameter: 5mm-8mm	Prepared by customers.
20	(Reserved) EV charger RS485 communication cable		
21	Inverter to STS communication cable	● Standard network cable: CAT 5E or higher categories net cable with RJ45 connector. ● Length: 10m	Shipped with device
*If single-core cable is required for BACK-UP AC cable and ON-GRID AC cable, please use fire-proof mud at the joint of the AC cable protection cover to ensure the protection level. *If the diameter of BACK-UP AC cable and ON-GRID AC cable is more than 38mm or the cable is inconvenient to install, the L line shall be stripped to more than 240mm, and the N and PE lines shall be stripped to more than 270mm, and the AC cable protective cover joint shall be blocked with fireproof mud.			

6.3.3 Preparing Combiner Box

NOTICE
● In parallel system, a combiner box is required to connect the generator to the generator port

of STS.

- In parallel system, the BACK-UP port of STS needs to be connected to the BACK-UP load using a combiner box when the inverters work in on-grid mode or off-grid mode.
- When the battery LX C101-10, LX C120-10, LX C138-10, and LX C156-10 are connected in parallel, the customer should prepare busbar and wiring terminals.

No.	Combiner box	Recommended specifications	Source
1	Generator combiner box	I≥90A*N; N is the number of inverter in parallel	Prepared by customers.
2	BACK-UP loads combiner box	I≥200A*N; N is the number of inverter in parallel	Prepared by customers.
3	Busbar for battery parallel connection and wiring terminals	1. Voltage resistance requirement: 3800Va.c./5320Vd.c., 60S, no breakdown or flashover, leakage current ≤ 2mA. 2. Maximum carrying current: ≥100A. 3. Insulation resistance: 2500Vd.c., 60S, insulation resistance ≥500MΩ. 4. Material requirements for bus bar and wiring terminal: copper. 5. All materials are RoHS compliant. 6. The material and coating of busbar and terminal shall be consistent (red copper T2 tin plating is recommended).	Prepared by customers.

6.4 Connecting the PE Cable

WARNING

- Connect the PE cable first before installing the equipment. Disconnect the PE cable before dismantling the equipment.
- The PE cable connected to the enclosure of the inverter cannot replace the PE cable connected to the AC output port. Make sure that both of the two PE cables are securely connected.
- Make sure that all the grounding points on the enclosures are equipotentially connected

when there are multiple inverters.

- To improve the corrosion resistance of the terminal, you are recommended to apply silica gel or paint on the ground terminal after installing the PE cable.

Inverter/STS

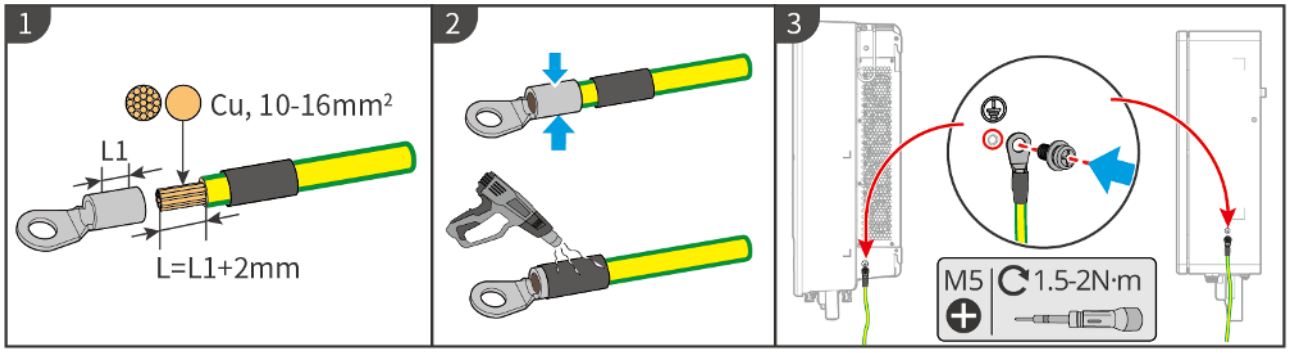

ET5010ELC0001

Battery system: LX C101-10, LX C120-10, LX C138-10, LX C156-10

NOTICE

The PE cable should be prepared by customers. The cross-sectional area of the PE cable conductor: 8mm².

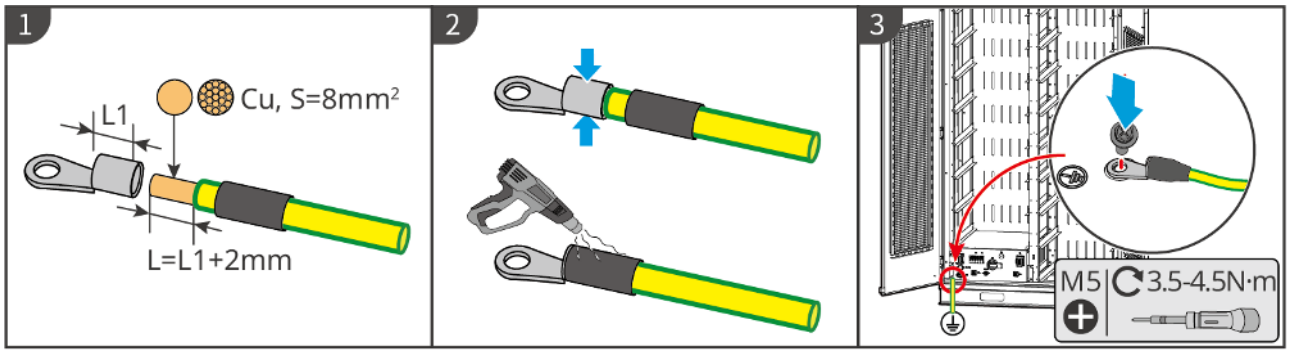

LXC10110ELC0001

Battery: GW100KWH-D-10, GW100KWH-D-10(Extension)

WARNING

- One of the grounding points on both sides of the energy storage system can be selected for grounding according to the actual site.
- The PE cable should be prepared by the customer.

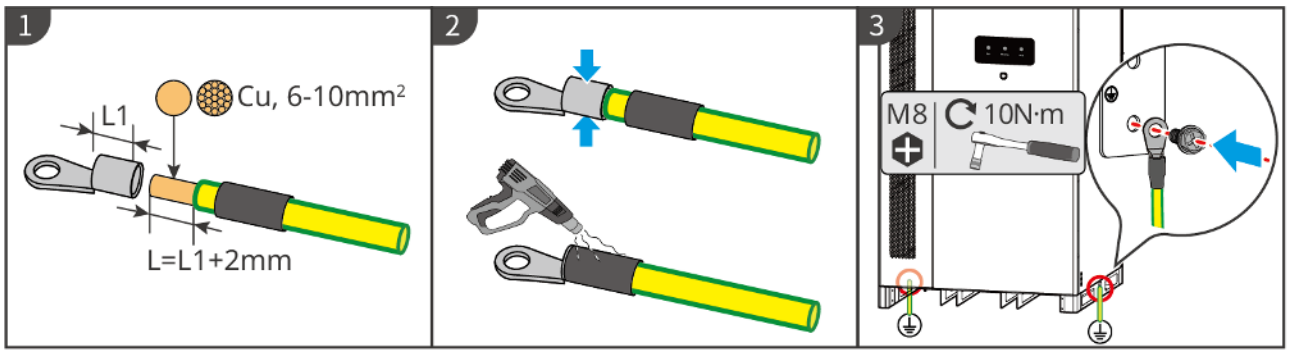

LXC10010ELC0001

Battery system: GW51.2-BAT-I-G10, GW56.3-BAT-I-G10

WARNING

- One of the grounding points on both sides of the energy storage system can be selected for grounding according to the actual site.
- The PE cable should be prepared by the customer.

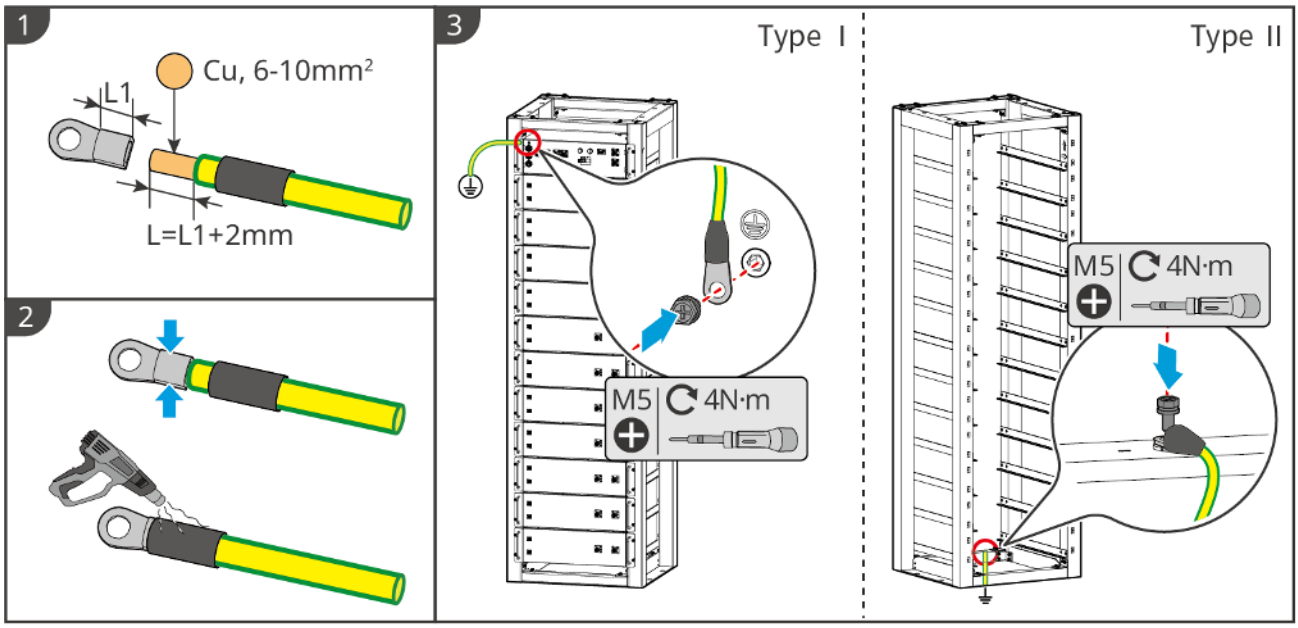

BAT10ELC0001

6.5 Connecting the PV Cable

DANGER

- Do not connect one PV string to more than one inverter at the same time. Otherwise, it may cause damage to the inverter.
- High voltage exists when the PV string is exposed to the sunlight, pay attention during electrical connections.
- Confirm the following information before connecting the PV string to the inverter. Otherwise, the inverter may be damaged permanently or even cause fire and cause personal and property losses.
  1. Make sure that the max short circuit current and the max input voltage per MPPT are within the permissible range.
  2. Make sure that the positive pole of the PV string connects to the PV+ of the inverter. And the negative pole of the PV string connects to the PV- of the inverter.

WARNING

- The PV strings cannot be grounded. Ensure the minimum insulation resistance of the PV string to the ground meets the minimum insulation resistance requirements before connecting the PV string to the inverter (R=maximum input voltage/ 30mA).
- Ensure the DC cables are connected tightly, securely and correctly.
- Measure the DC cable using the multimeter to avoid reverse polarity connection. Also, the voltage should be within the permissible range.
- The MPPT string parallel connection must meet the requirements of local laws and regulations.

NOTICE

The two input strings per MPPT should be of the same type, the same number of modules, the same tilt and angle to ensure the best efficiency.

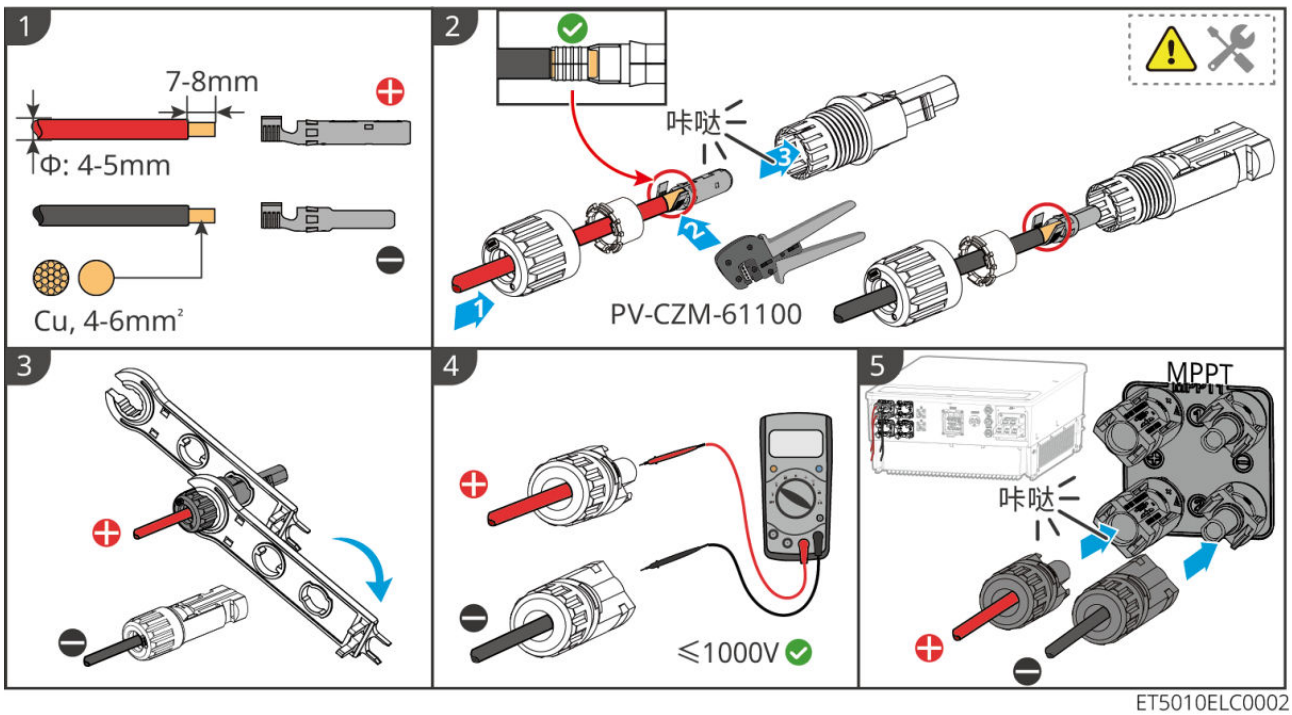

ET5010ELC0002

6.6 Connecting the Battery Cable

DANGER

- Do not connect one battery pack to more than one inverter at the same time. Otherwise, it may cause damage to the inverter.
- It is forbidden to connect loads between the inverter and batteries.
- When connecting battery cables, use insulated tools to prevent accidental electric shock or short circuit to the batteries.
- Ensure that the open circuit voltage of the battery is within the permissible range of the inverter.
- Install a DC breaker between the inverter and the battery in compliance with local laws and regulations.

WARNING

- Measure the DC cables using a multimeter to avoid reverse polarity connection. Also, the voltage should be under the permissible range.
- Connect the battery cables to the corresponding terminals such BAT+, BAT- and grounding ports correctly. Otherwise it will cause damage to the inverter.
- Ensure that the whole cable cores are inserted into the terminal holes. No part of the cable core can be exposed.
- Ensure that the cables are connected securely. Otherwise it will cause damage to the inverter

due to overheat during its operation.

- Do not connect one battery pack to more than one inverter at the same time. Otherwise, it may cause damage to the inverter.

Battery system wiring diagram

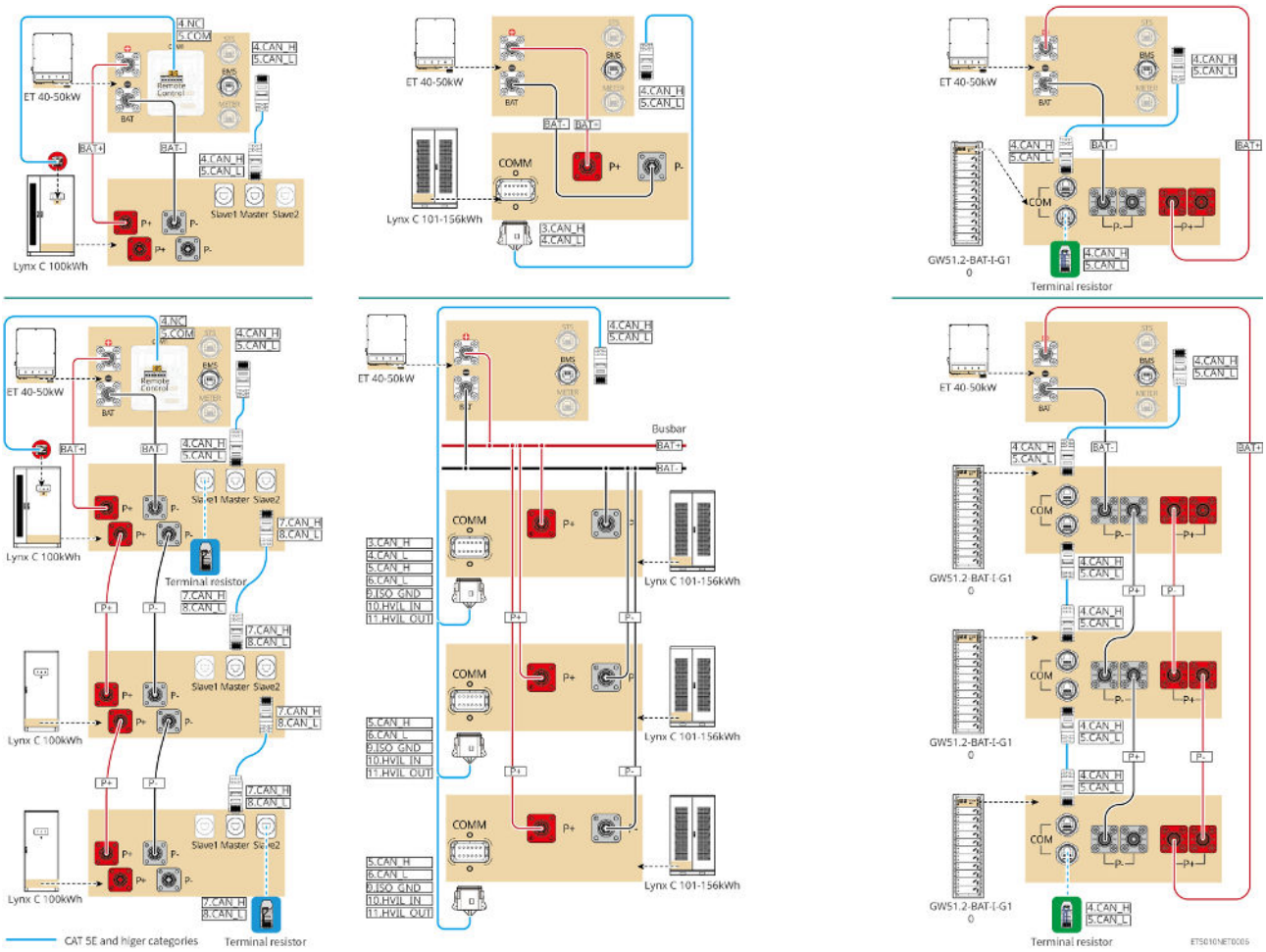

6.6.1 LX C101-10, LX C120-10, LX C138-10, LX C156-10

6.6.1.1 Connecting the Power Cable between Inverter and Battery

NOTICE
A maximum of 3 battery systems can be connected in parallel in the same system.

Overview of inverter and battery power cable

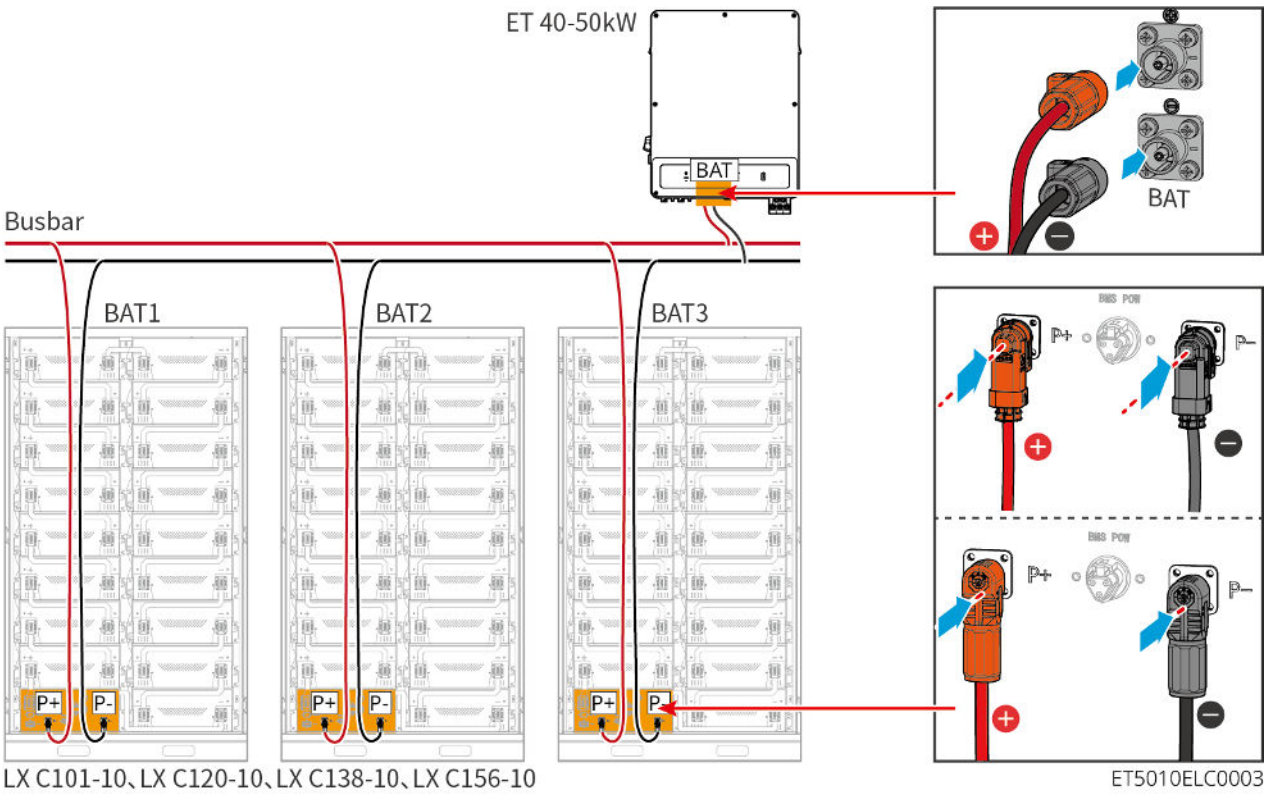

Make the inverter power cable

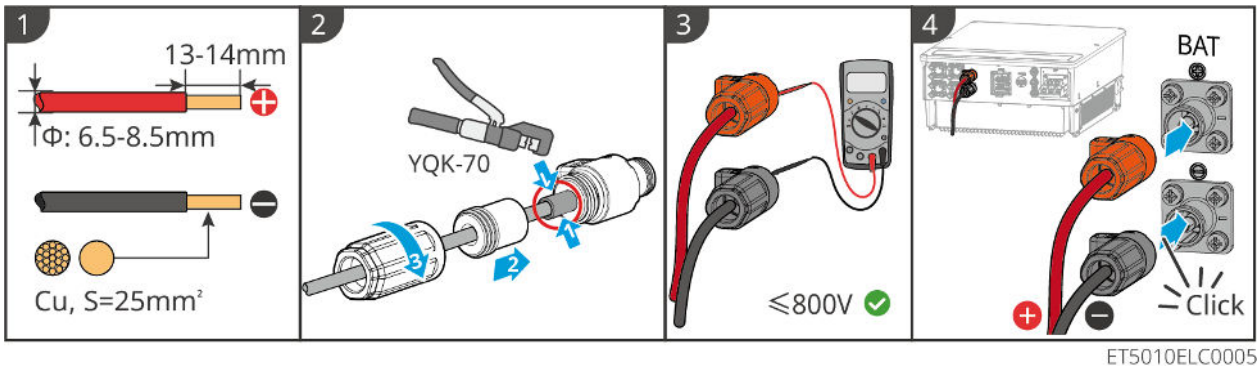

Method for making cables at single battery system end (LX C101-10, LX C120-10, LX C138-10, LX C156-10)

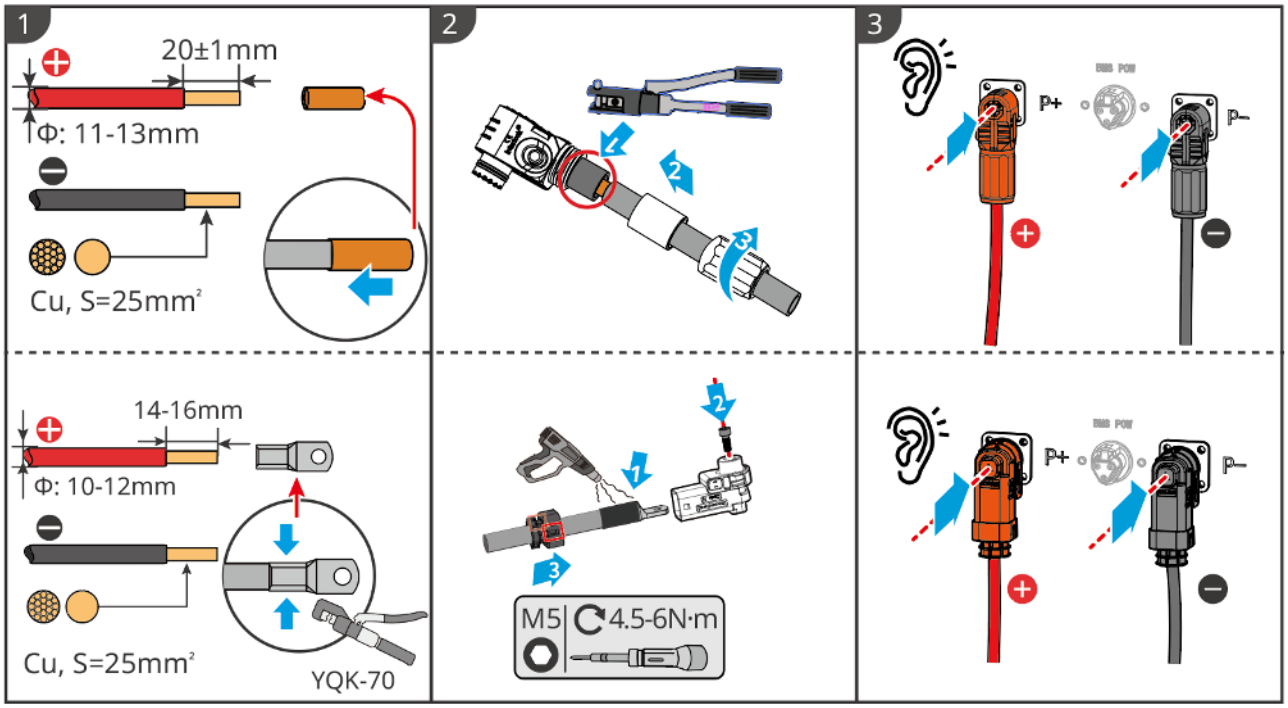

LXC10110ELC0002

Method for making cables at battery system end for parallel connection (LX C101-10, LX C120-10, LX C138-10, LX C156-10)

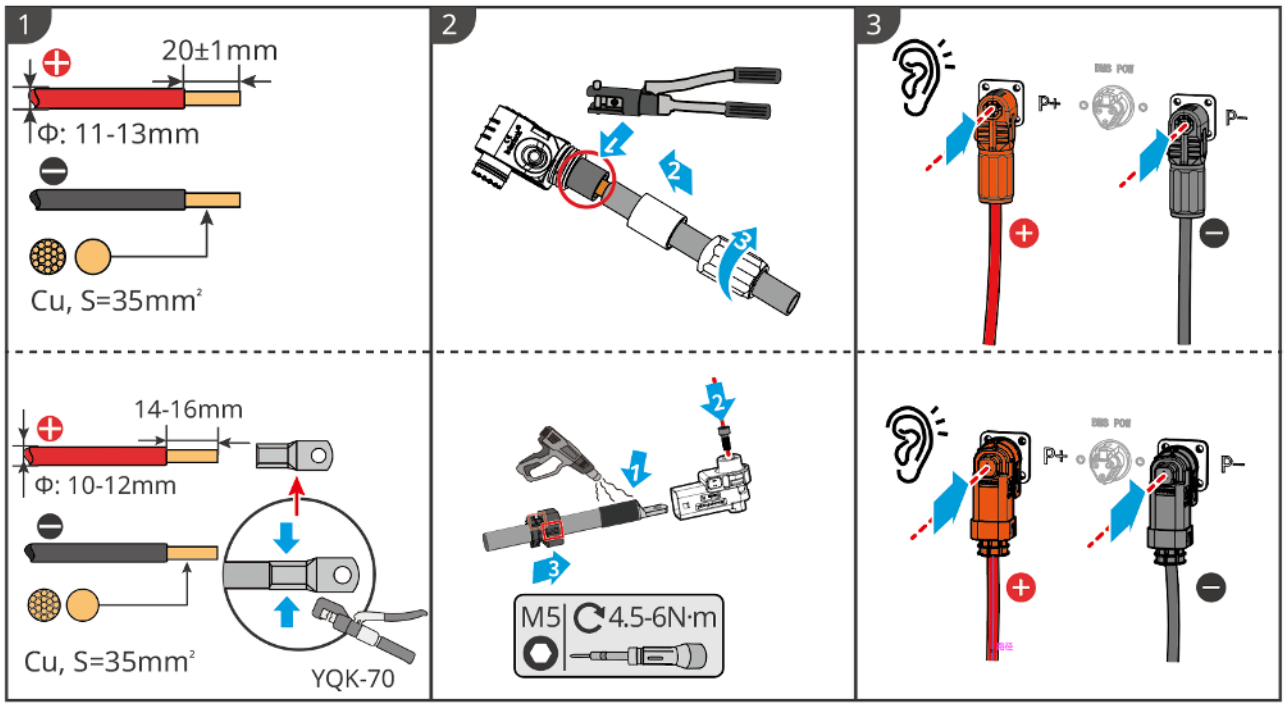

LXC10110ELC0006

6.6.1.2 Connecting the copper bars in the battery system

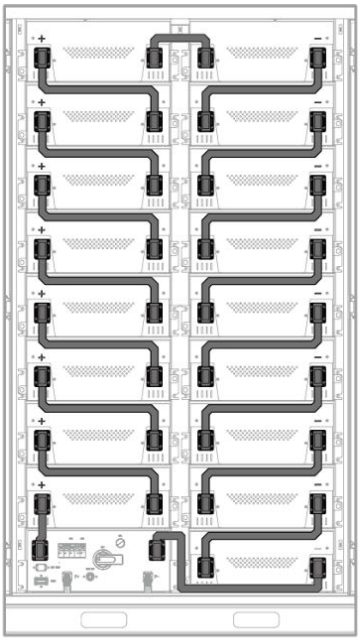

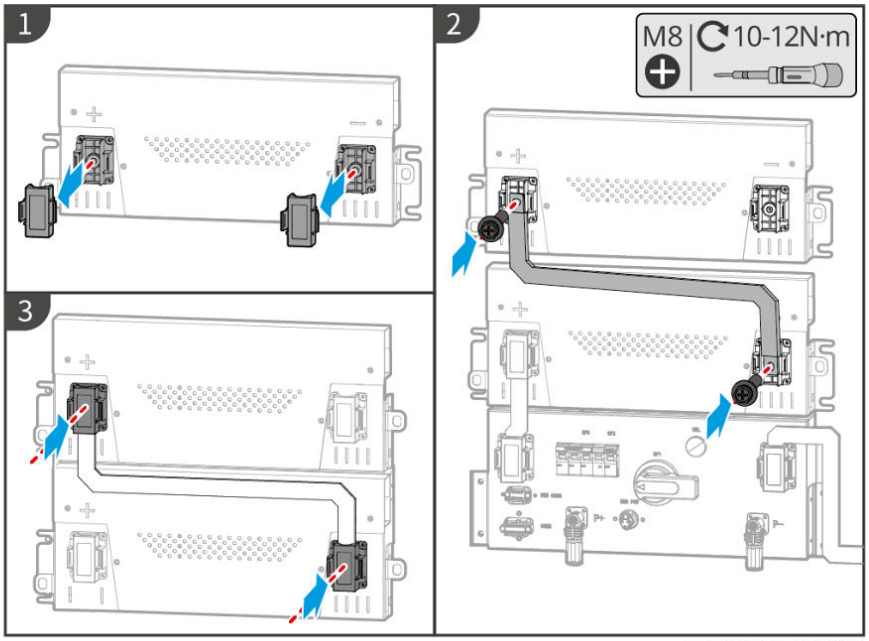

LXC10110ELC0003

6.6.1.3 Connecting the communication cable

NOTICE
The communication cable is included in the package of the battery system, the included communication cable is recommended.

Instructions for BMS communication connection between the inverter and the battery:

Port	Definition	Description
BMS	4: CANH1 5: CANL1	The inverter communicates with the battery through CAN.
COMM	3: CAN2H 4: CAN2L	Connect inverter using CAN communication
	5: CAN3H 6: CAN3L	CAN communication for parallel connected battery system
	7: RS485_A1 8: RS485_B1	Connecting with inverter using RS485 communication
	9: ISO_GND	Grounding of parallel connected batteries mutual locking
	10: HVIL_IN	Input and output of interlocking signals between paralleled

	11: HVIL_OUT	batteries

Communication cable between inverter to battery

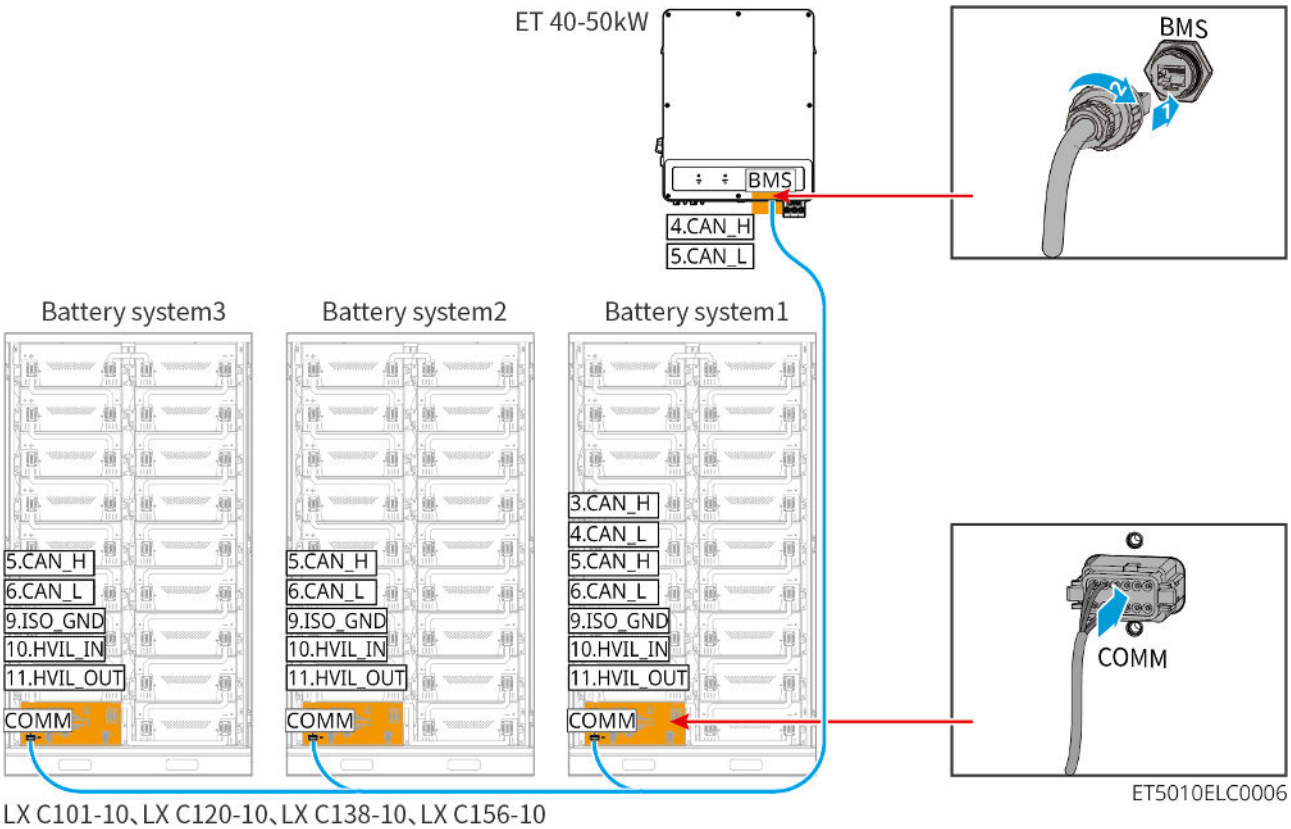

Battery communication cable

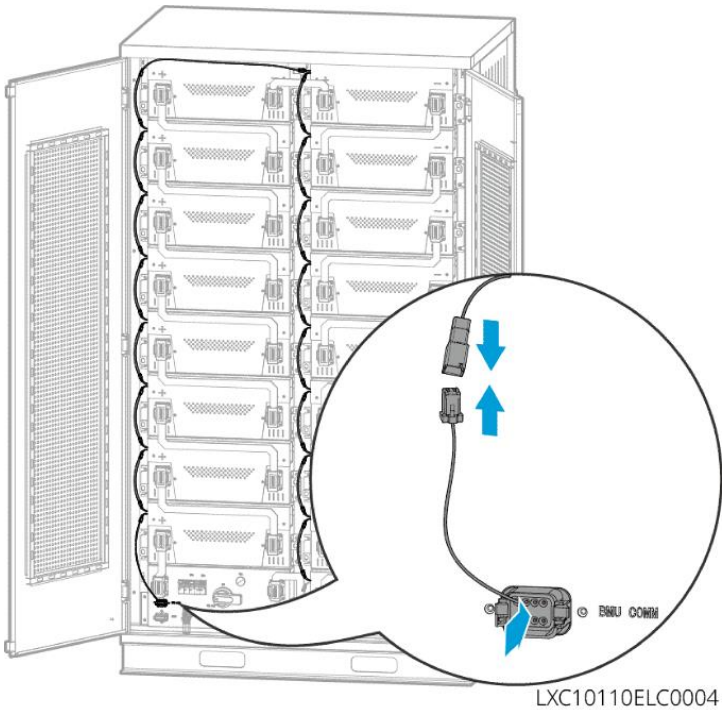

6.6.1.4 (Optional) Connecting the battery LX C 101-10, LX C120-10, LX C138-10, LX C156-10 AC power supply cable

NOTICE
● The BMS is able for DC self-powered, as well as Single Phase AC supplying externally. The single phase AC cable is used for external power supply. Choose whether to use it based on the actual demanding. ● Please use an uninterruptible power supply for single phase AC power supply (UPS: Uninterruptable Power Supply) ● The input voltage range for the single phase AC power is 100-240V. Its power is ≥ 60W and frequency is 50-60Hz. ● The single phase AC terminals and cables are delivered with the product.

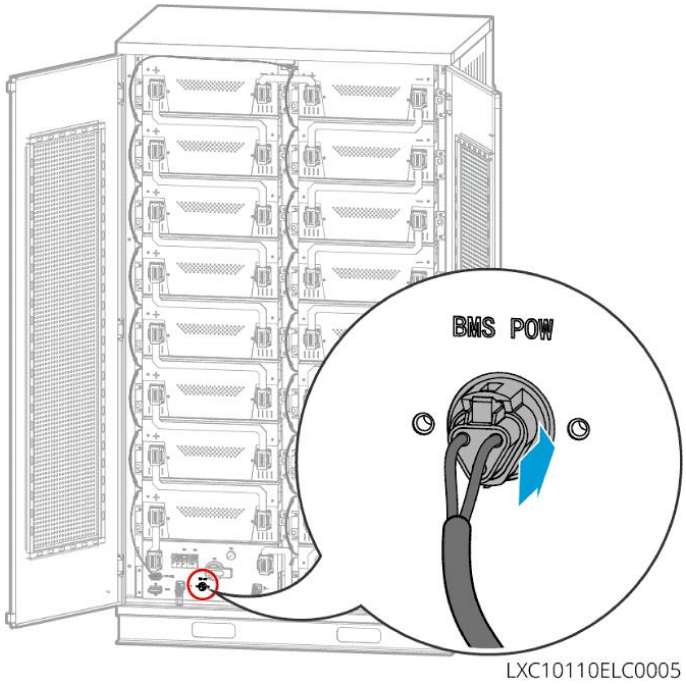

6.6.2 GW100KWH-D-10, GW100KWH-D-10(Extension)

Introduction of outlet hole:

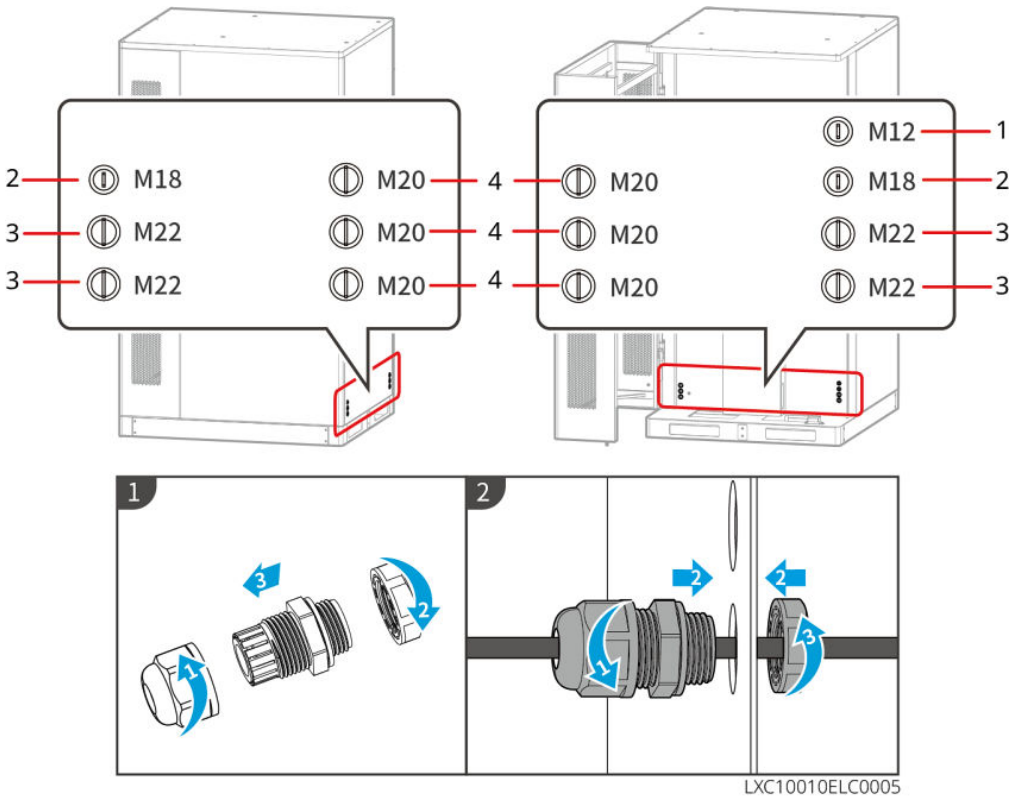

No.	Description	No.	Description
1	Threading hole for the emergency stop button control cable	2	Threading hole for the battery positive and negative power cable
3	Threading hole for the inverter battery communication cable	4	Threading hole for the air conditioner cable

Electrical connection diagram of battery and inverter:

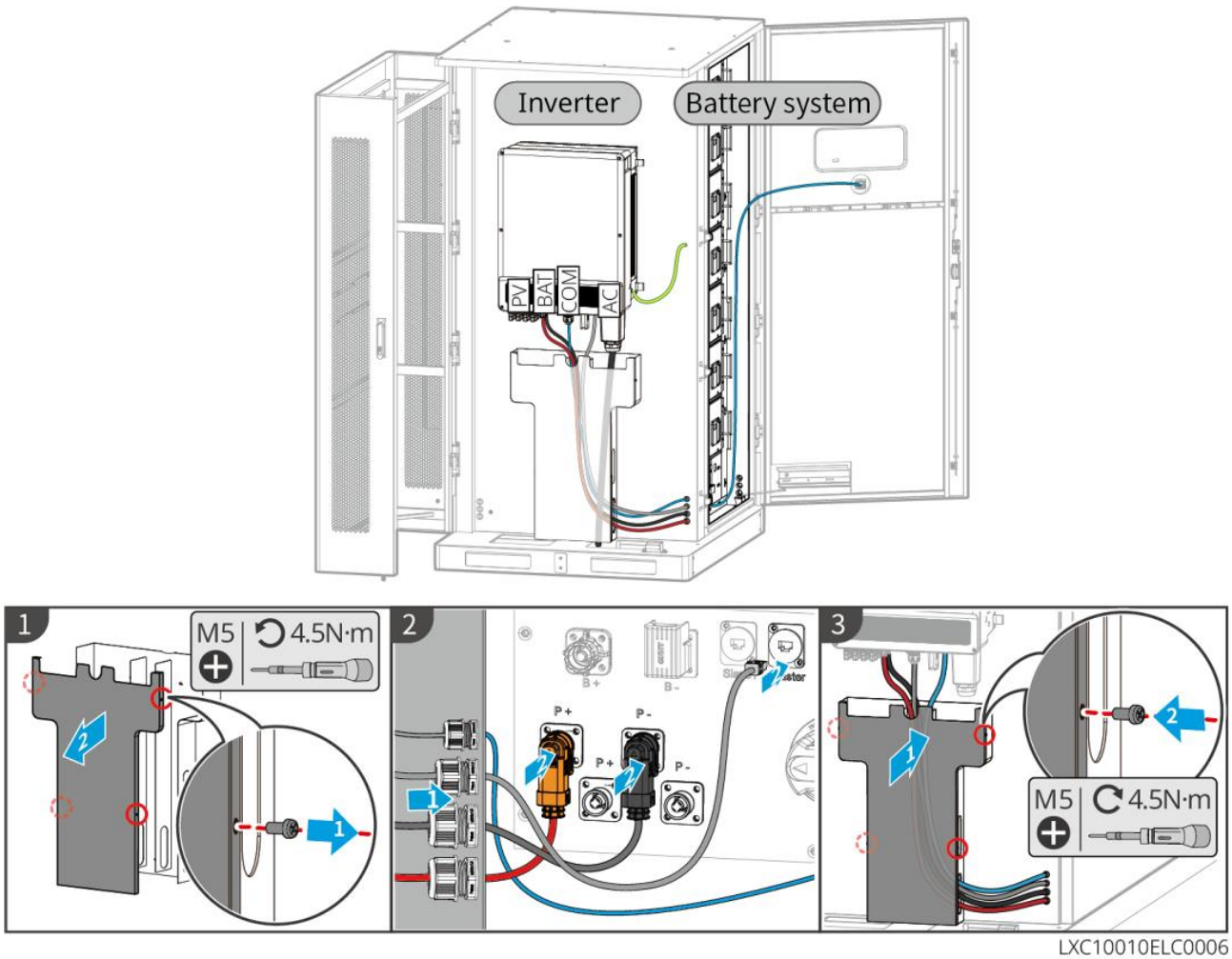

6.6.2.1 Connecting the Power Cable between Inverter and Battery

NOTICE
● The battery system is provided with the power cable connected with the inverter, please use the power cable delivered with the battery. The side of the cable connected to the inverter can be used directly after being crimped; the other side connected to the battery system shall be used after crimping with reference to the method for crimping the cable at the battery parallel system. ● Power cable for parallel connection of battery system need to be prepared by customers.

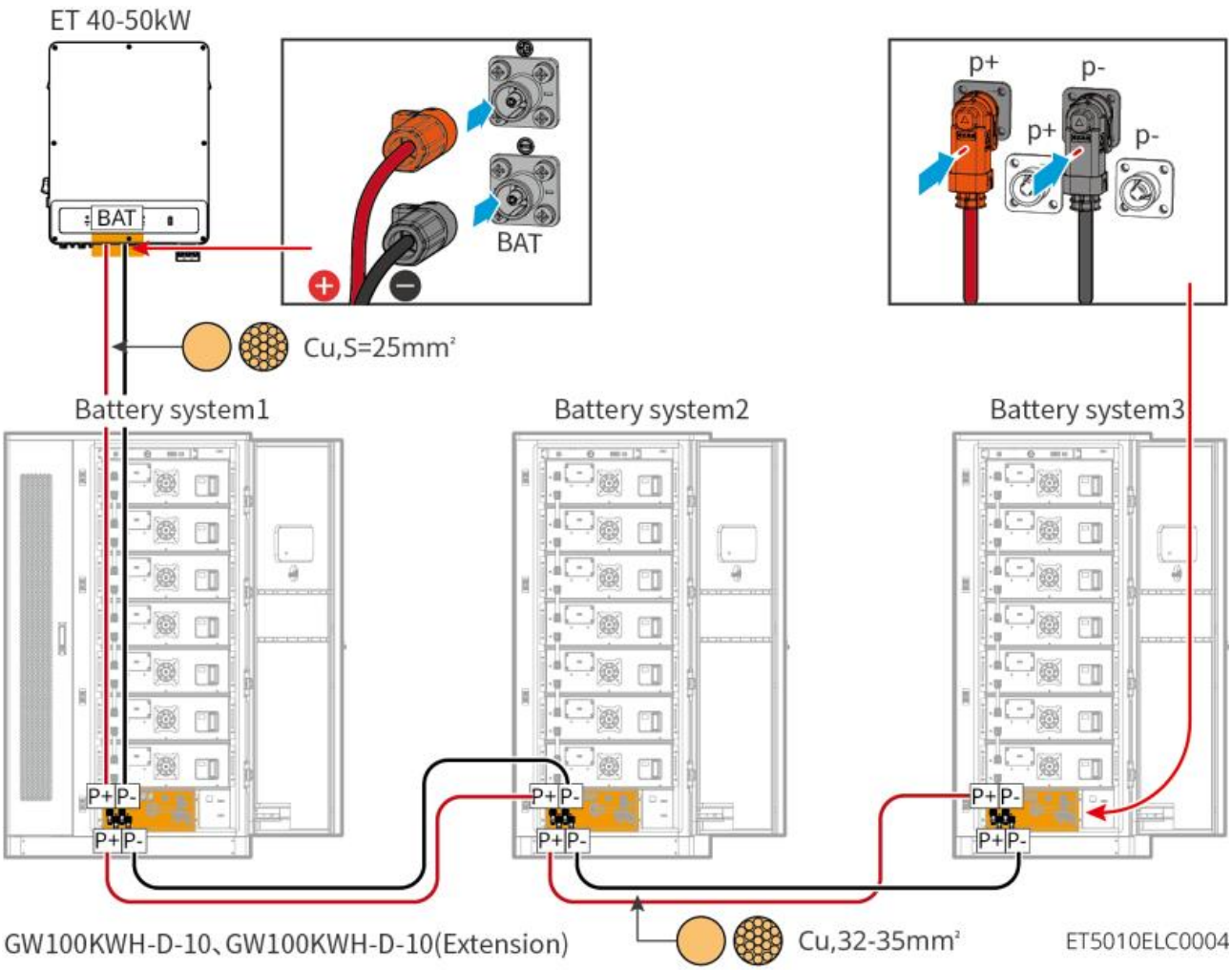

Make the inverter power cable

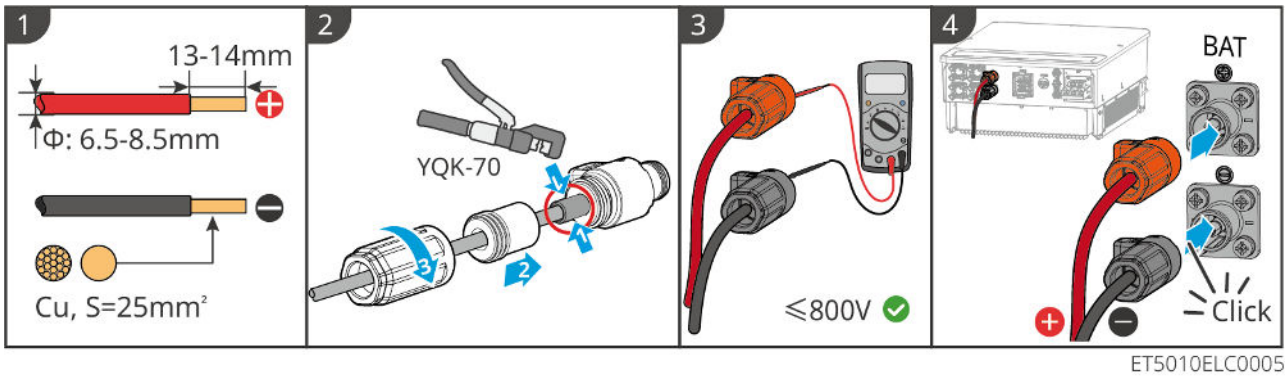

GW100KWH-D-10 and GW100KWH-D-10 (Extension) Cable crimping of battery side (cable shipped with box)

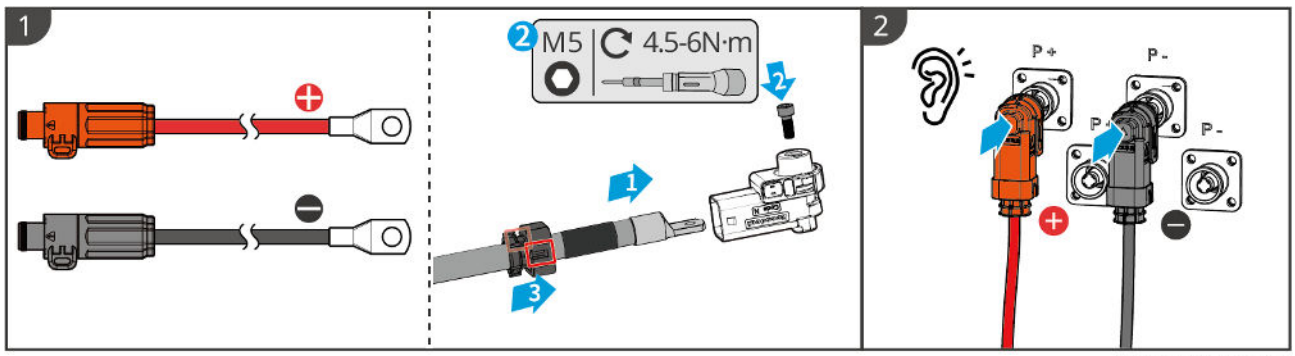

LXC10010ELC0007

GW100KWH-D-10 and GW100KWH-D-10 (Extension) Cable crimping of battery parallel connection

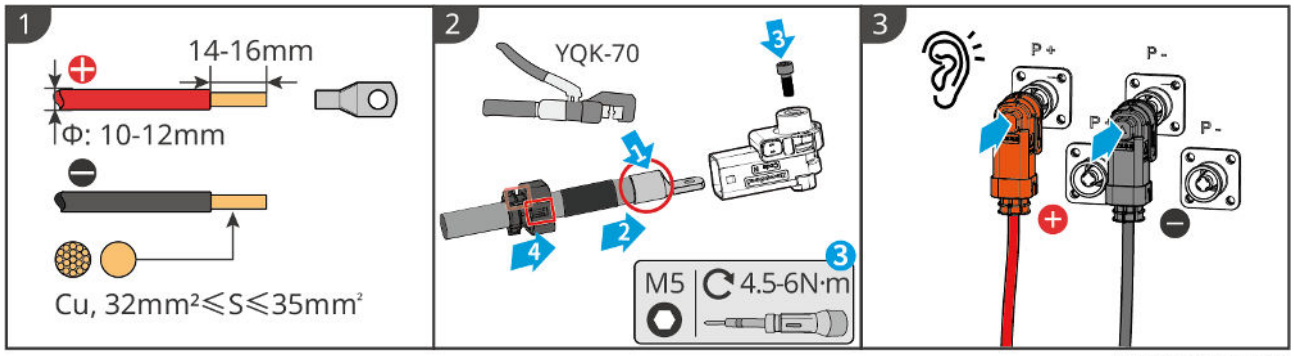

LXC10010ELC0002

6.6.2.2 Connecting the copper bars in the battery system

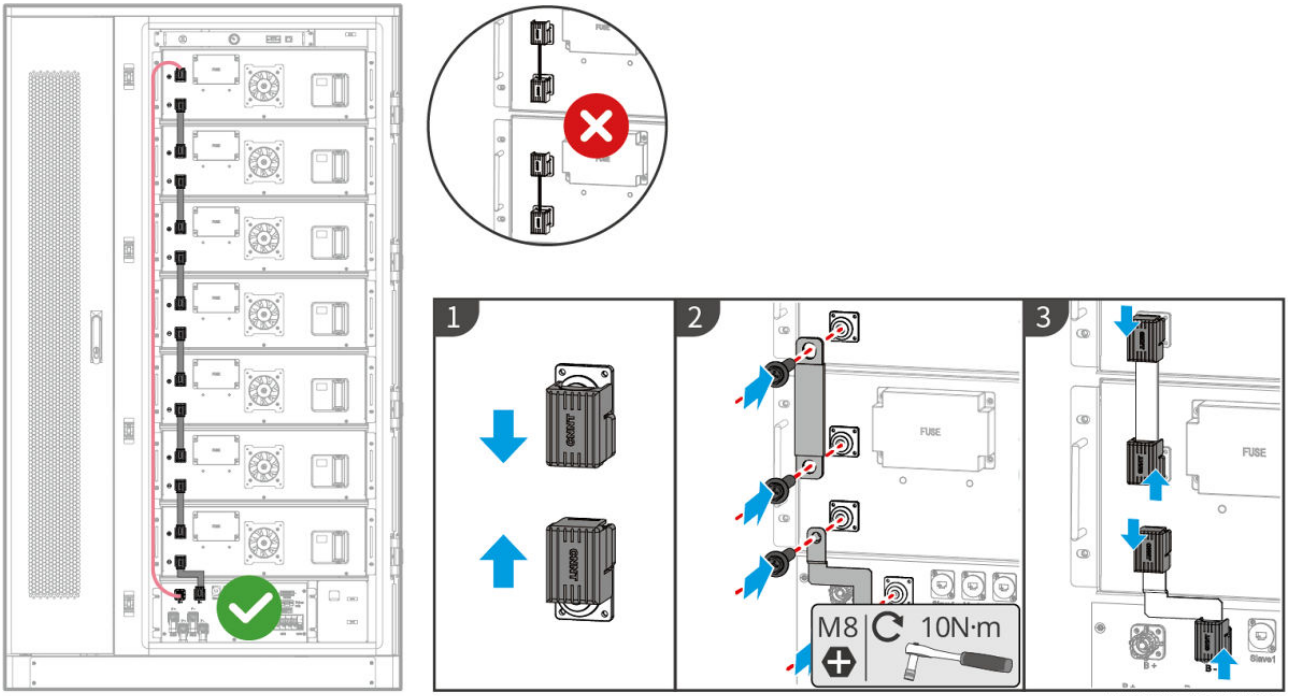

LXC10010ELC0003

6.6.2.3 Connecting the communication cable

NOTICE
● The BMS communication cable is included in the package of the battery system, the included BMS communication cable is recommended. If more communication cables are needed, prepare shielded network cables and RJ connectors by yourself to make the cable. ● When the battery systems are connected in parallel, the remote shutdown port of the inverter is connected to the main battery system.

Instructions for BMS communication connection between the inverter and the battery:

Device	Port	Definition	Description
Inverter	BMS	4: CANH1 5: CANL1	The inverter communicates with the battery through CAN.
	Remote Control	4: DGND_S 5: IO1	Connect the emergency stop switch on the battery system
Battery	Slave1	7: CAN2H 8: CAN2L	CAN communication for parallel connected battery system
	Master	1: RS485A 2: RS485B	Connecting with inverter using RS485 communication
		4: CAN3H 5: CAN3L	Connect inverter using CAN communication
		7: CAN2H 8: CAN2L	CAN communication for parallel connected battery system
	Slave2	7: CAN2H 8: CAN2L	CAN communication for parallel connected battery system
	Emergency stop switch	● DGND_S ● IO1	Use the emergency stop switch cable on the battery system to connect to the remote shutdown port of the inverter

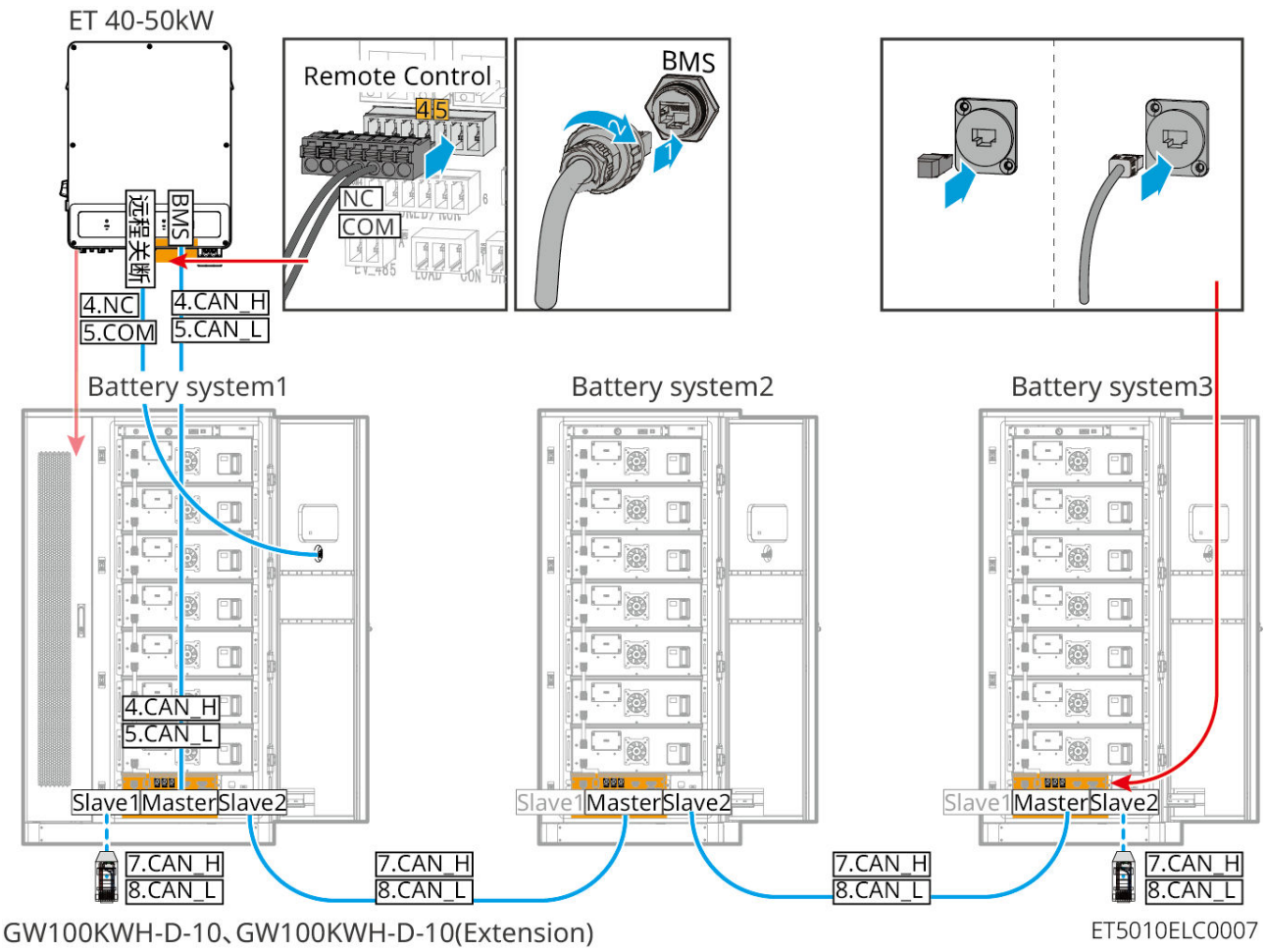

6.6.2.4 Connect the battery system air conditioning power supply cable

NOTICE

- Recommend connecting the air conditioning power cable to the power distribution cabinet.
- When the temperature of the battery system is lower than -20°C, it takes about 2~3 hours to use the air conditioner to raise the temperature to the operating state. When heating at low temperature, the air conditioner needs to get electricity from power grid.
- An AC circuit breaker shall be installed between the air conditioner and the distribution cabinet to make sure safe power-off of the air conditioner when an exception happens. The specification of AC switch shall not be less than 16A.
- In case of power failure of the power grid, if the air conditioner needs emergency power supply, the power cable of the air conditioner can be connected to the BACK UP side of STS for power supply.
- When the battery system is used in parallel, the air conditioner power switch shall be connected in series for use.

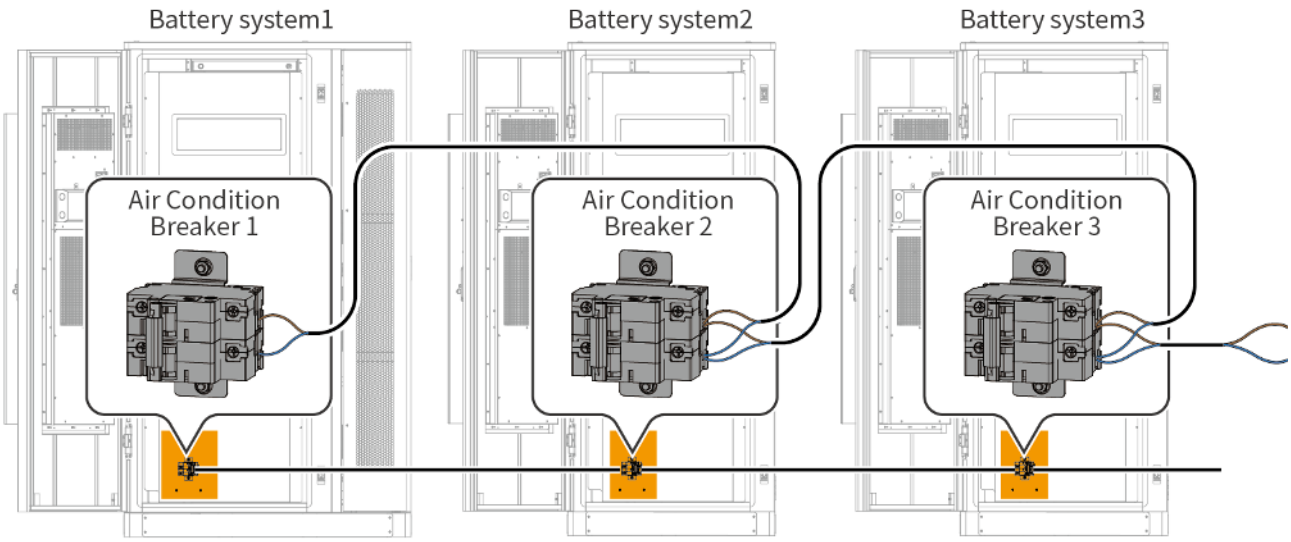

GW100KWH-D-10、GW100KWH-D-10(Extension)

LXC10010ELC0008

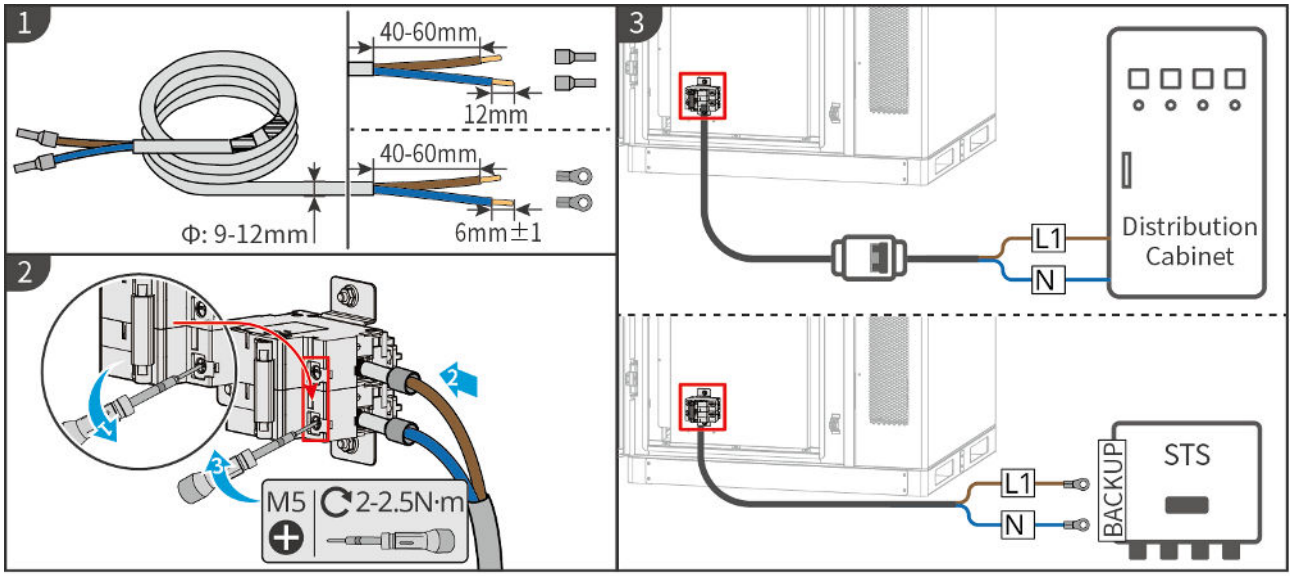

LXC10010ELC0004

6.6.2.5 Opening the fire protection system

Using a 14mm wrench, rotate the screw behind the pressure gauge counterclockwise for about 1.5 turns, and the fire protection system will be successfully opened.

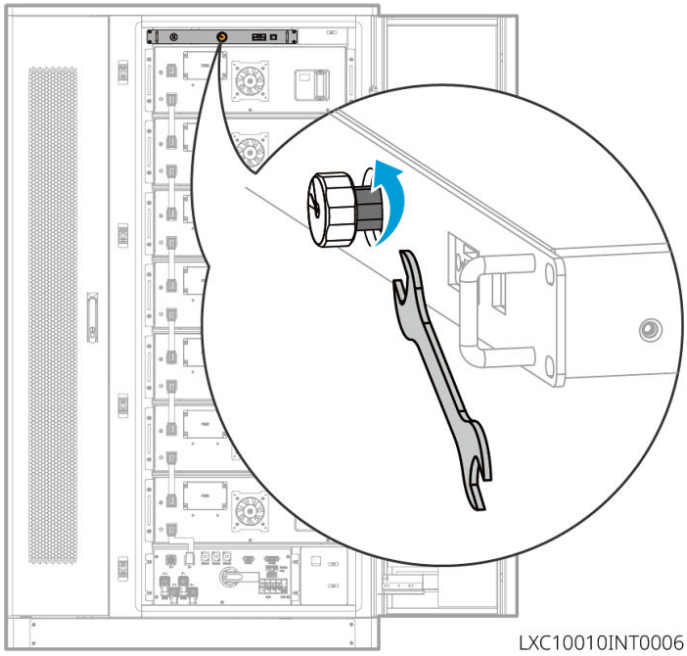

6.6.2.6 Installing the air conditioner drain pipe

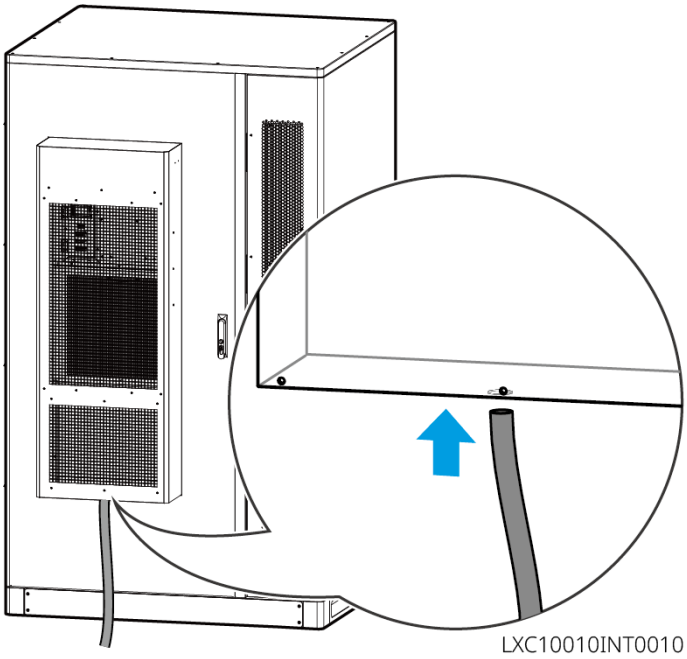

6.6.2.7 Installing the baffle

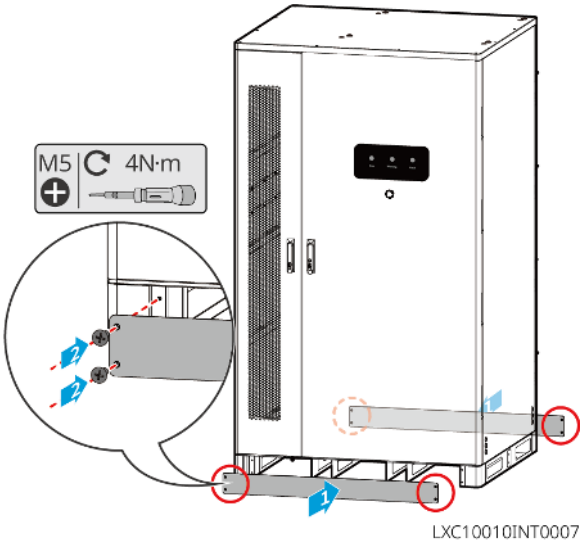

6.6.3 GW51.2-BAT-I-G10, GW56.3-BAT-I-G10

6.6.3.1 Connecting the Power Cable between Inverter and Battery

NOTICE
A maximum of 3 battery systems can be connected in parallel in the same system.

Overview of inverter and battery power cable

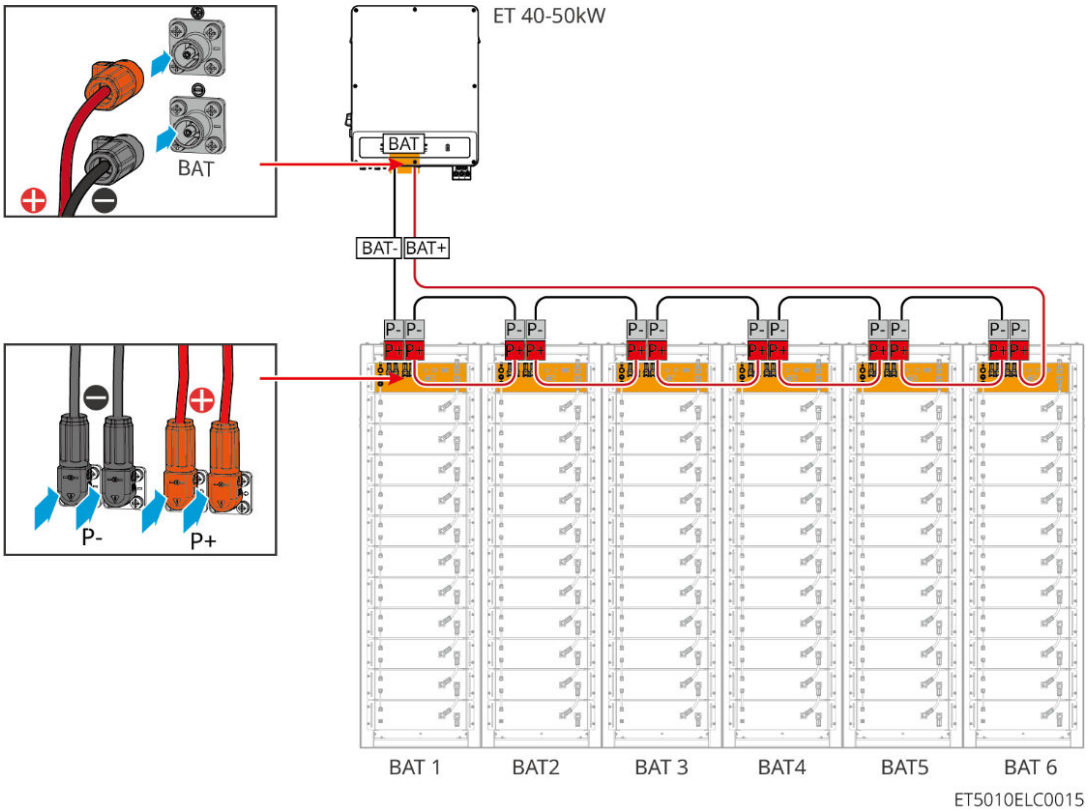

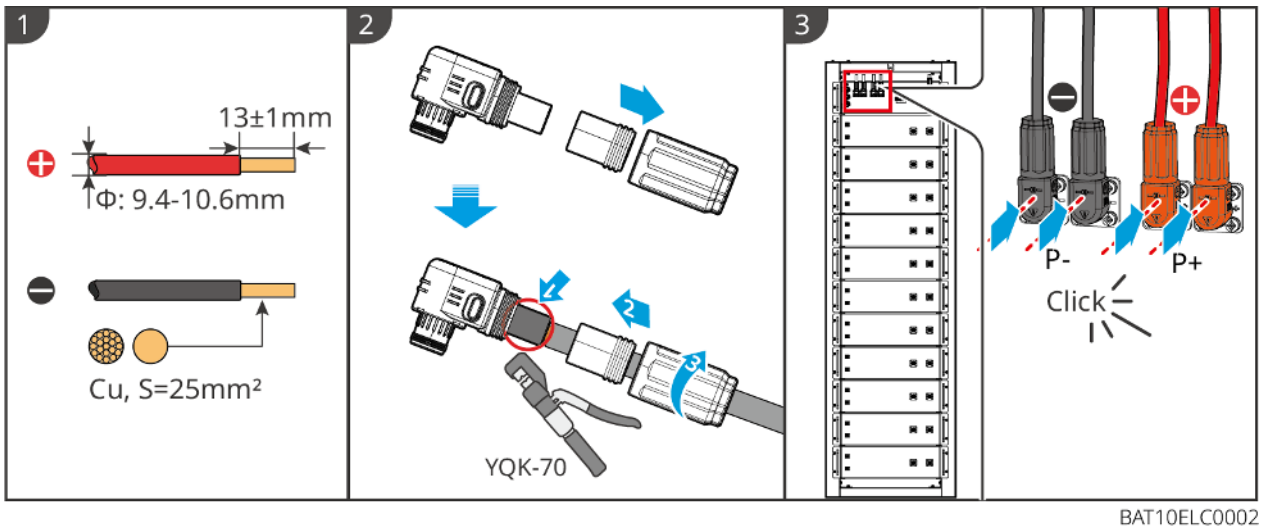

6.6.3.2 Connecting the power cable in the battery system

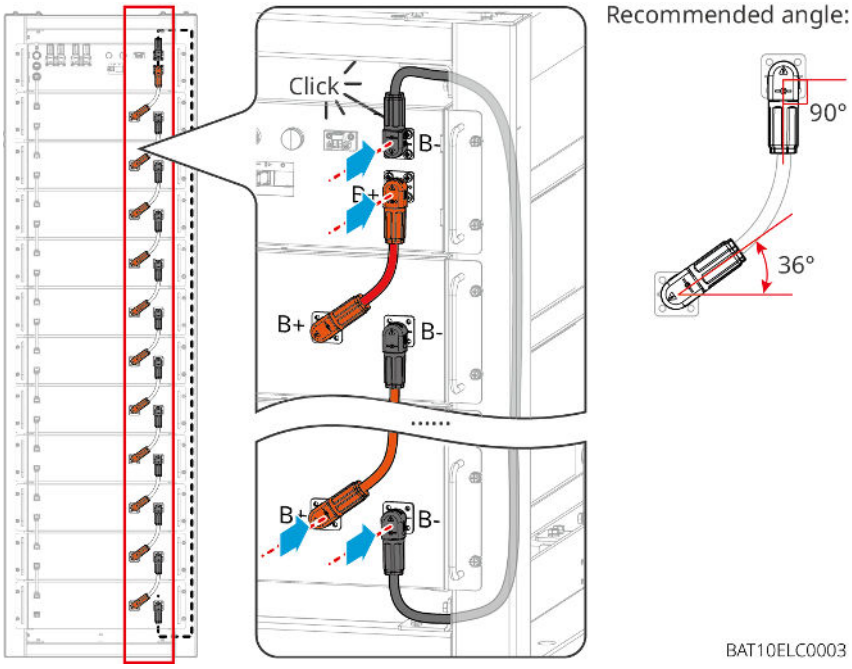

6.6.3.3 Connecting the communication cable

NOTICE
The communication cable is included in the package of the battery system, the included communication cable is recommended.

Instructions for BMS communication connection between the inverter and the battery:

Port	Definition	Description
COM1	1:RS485_A1 2:RS485_B1	Communicate with an inverter (reserved)

	4:CAN_H 5:CAN_L	Communicate with an inverter or another battery system
COM2	1:RS485_A1 2:RS485_B1	Communicate with an inverter (reserved)
	4:CAN_H 5:CAN_L	Communicate with an inverter or another battery system

Communication cable between inverter to battery

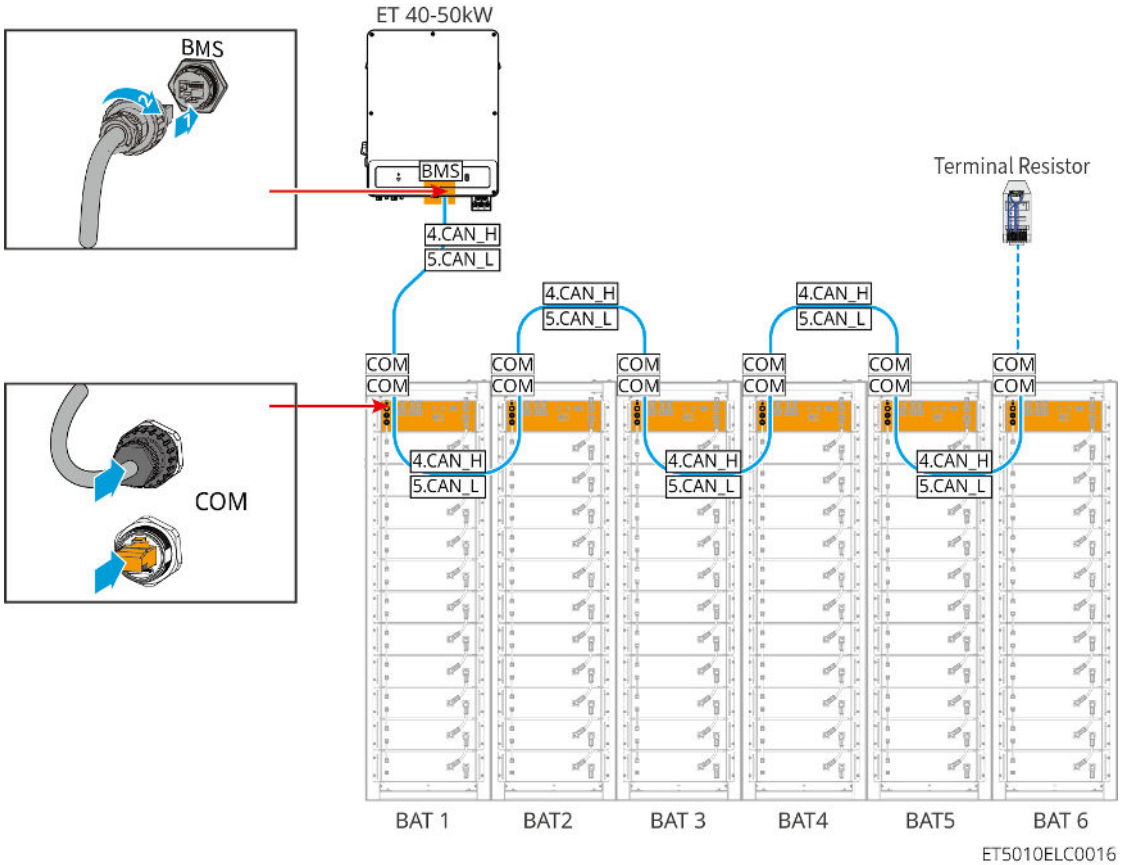

Battery communication cable

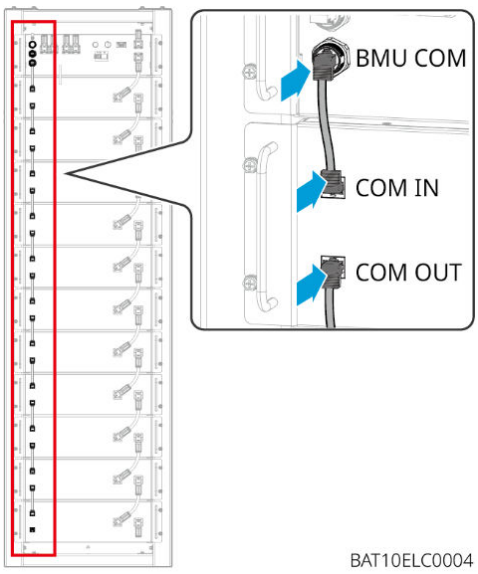

6.7 Connecting the AC Cable

WARNING

- The residual current monitoring unit (RCMU) is integrated into the inverter to avoid the residual current exceeds the limit. The inverter will disconnect the utility grid quickly once it found the residual current exceeds the limit.
- Ensure the AC cables match the AC terminals labeled "L1", "L2", "L3", "N", "PE" when connecting cables. Incorrect cable connections will damage the equipment.
- Ensure that the whole cable cores are inserted into the terminal holes. No part of the cable core can be exposed.
- Ensure that the insulation board is inserted into the AC terminal tightly.
- Ensure that the cables are connected securely. Otherwise it will cause damage to the inverter due to overheat during its operation.
- To keep the BACK-UP loads working when the Inverter is powered off for maintenance, single pole double throw switch is recommended.

6.7.1 Connecting the AC cable of the inverter

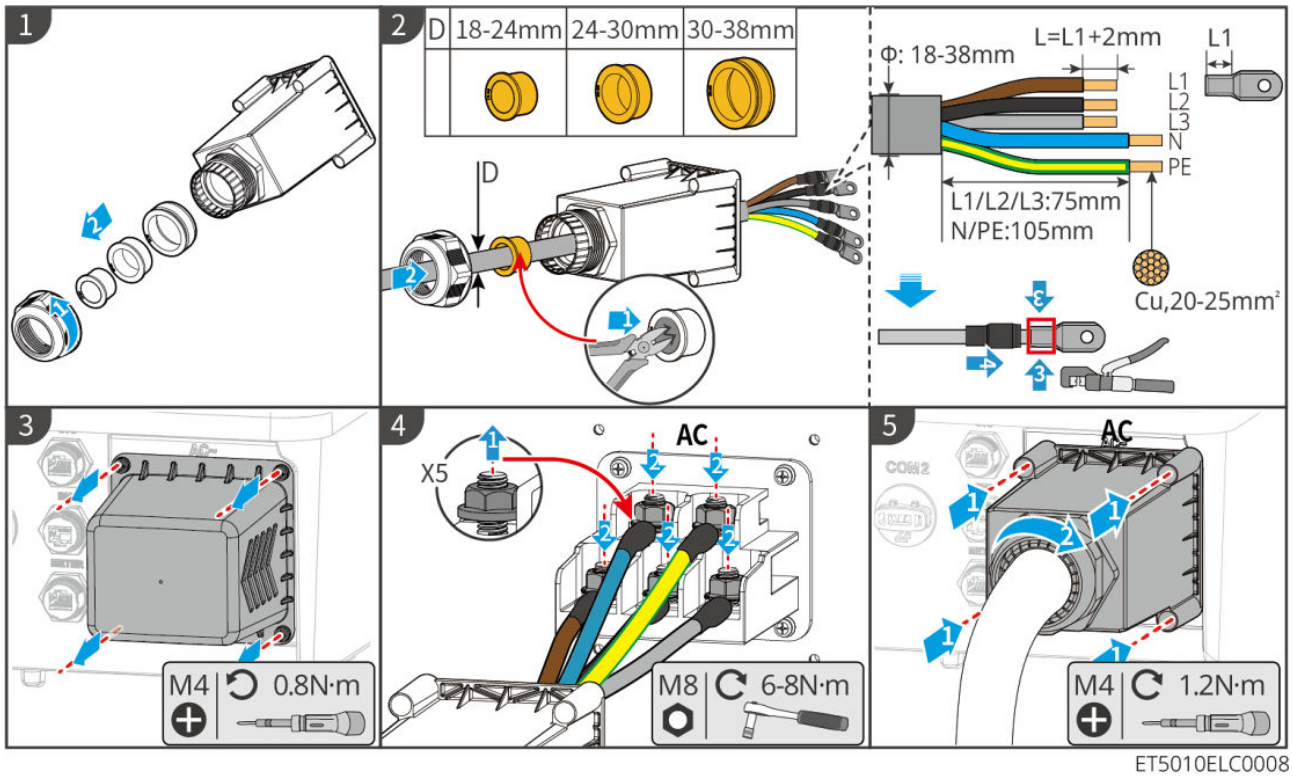

6.7.2 (Optional) Connecting the AC cable of STS

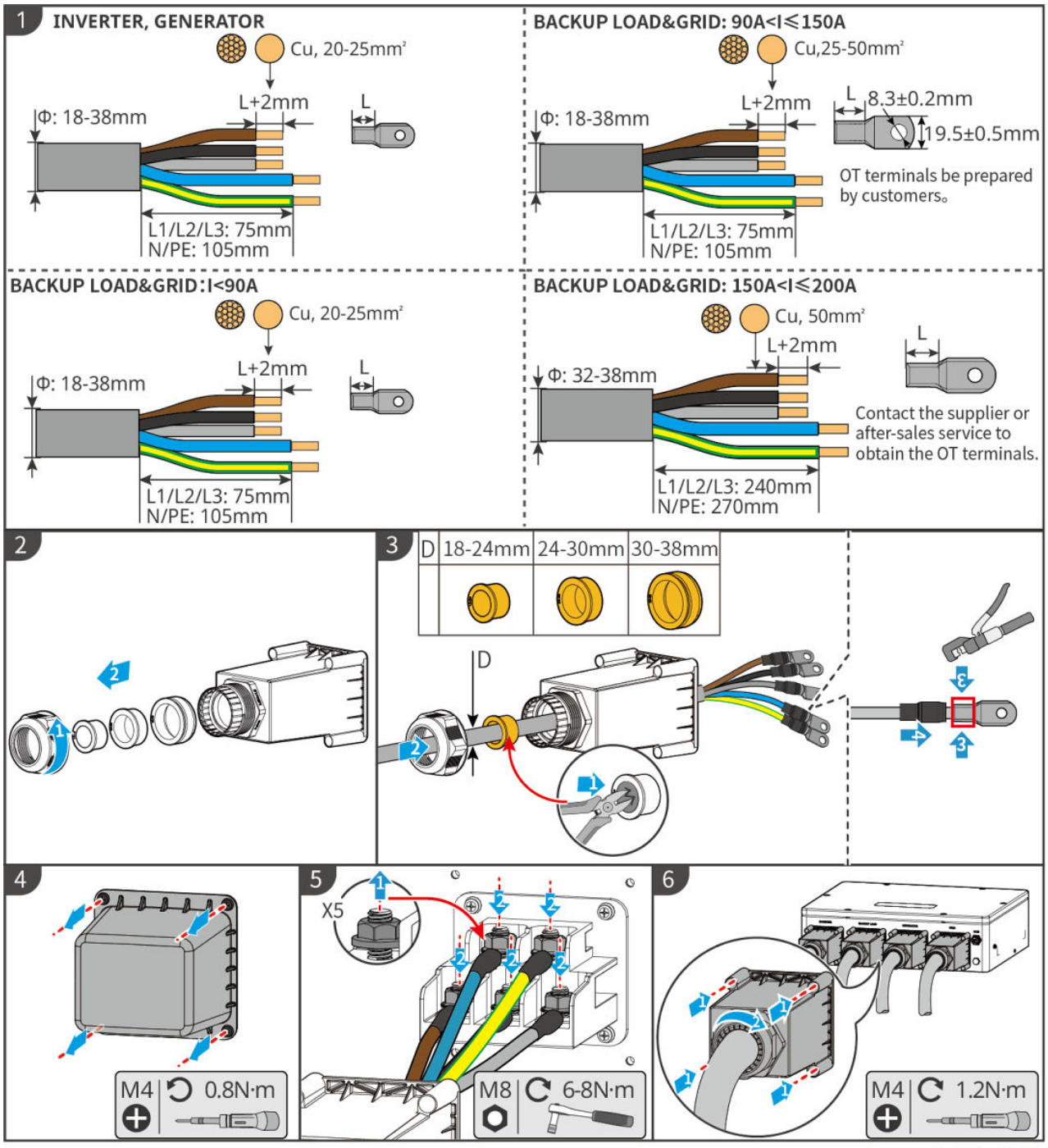

6.8 Connecting the Meter cable

NOTICE
● The smart meter included in the package is intended for a single inverter. Do not connect one smart meter to multiple inverters. Contact the manufacturer for additional smart meters if multiple inverters are connected.

- Ensure that the CT is connected in the correct direction and phase sequences, otherwise the monitoring data will be incorrect.
- Ensure the cables are connected tightly, securely and correctly. Inappropriate wiring may cause poor contacts and damage the equipment.
- In areas at risk of lightning, if the meter cable exceeds 10m and the cables are not wired with grounded metal conduits, you are recommended to use an external lightning protection device.

Wiring of GM330

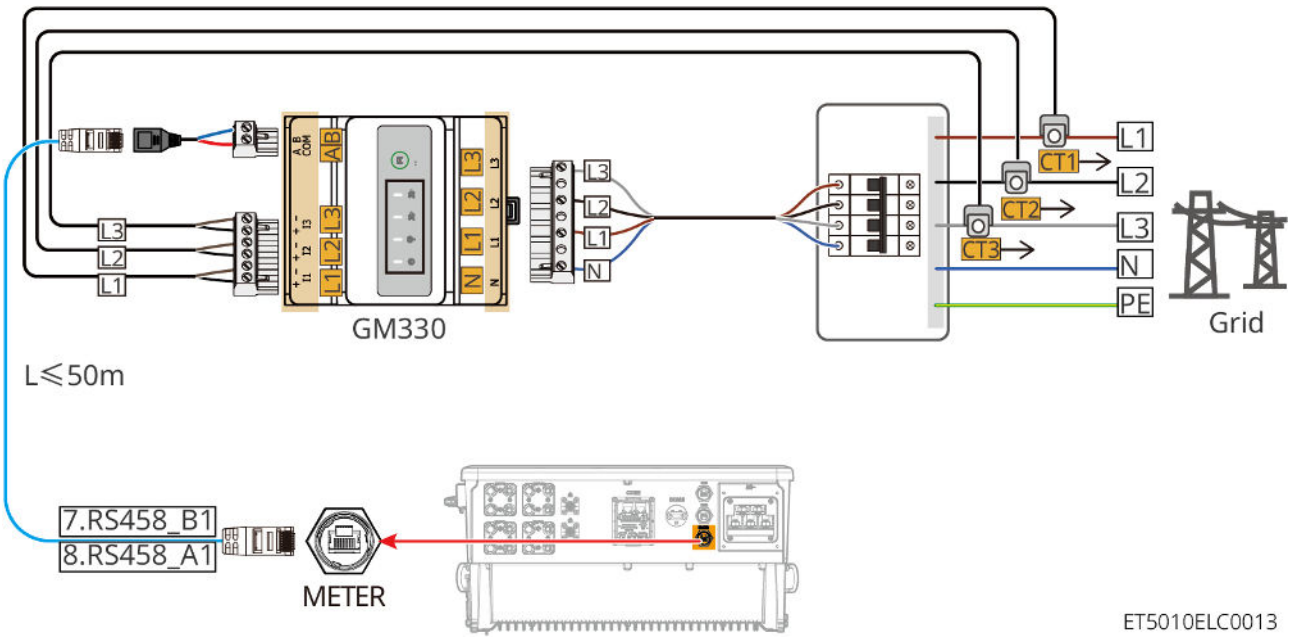

Connection steps

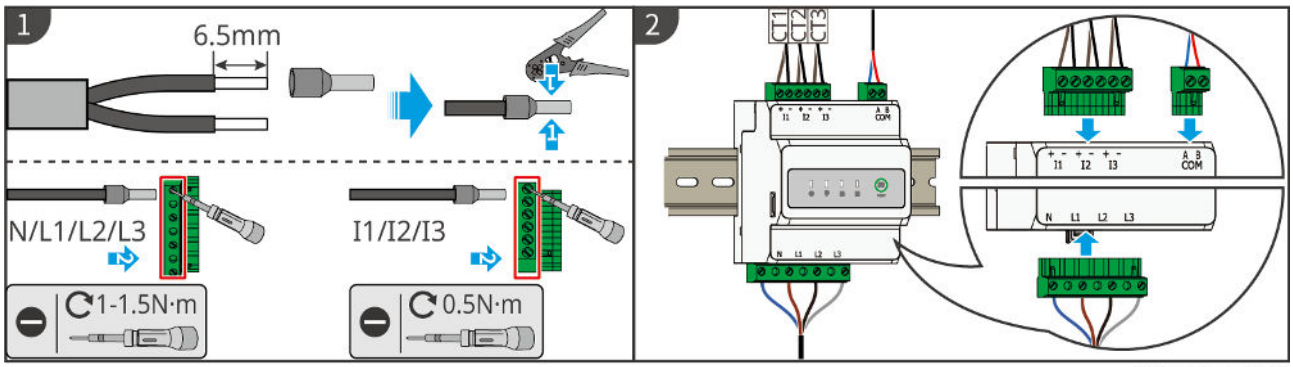

Installing the CT (Type I)

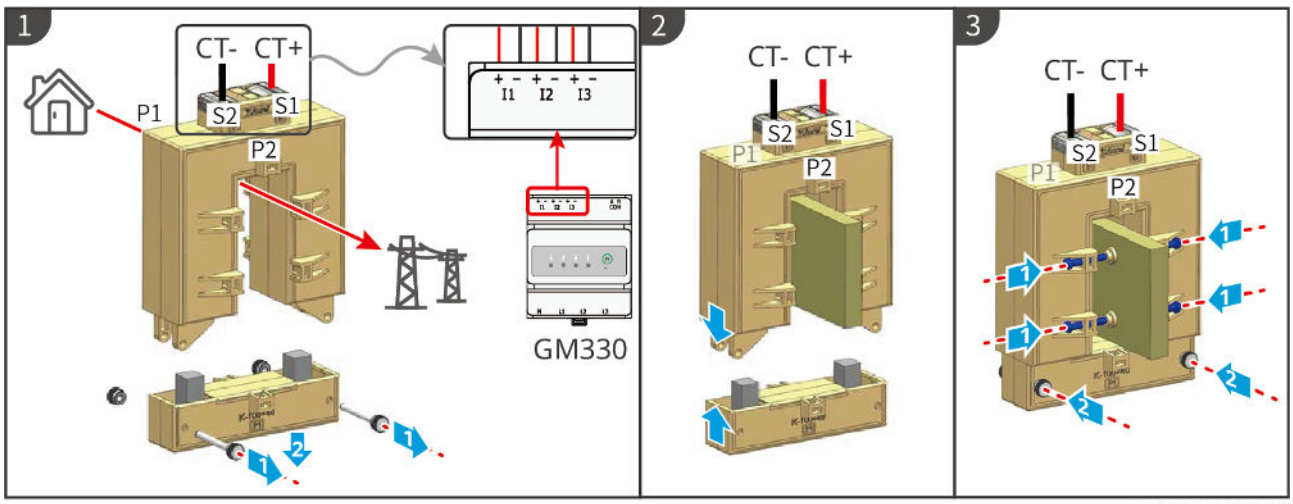

GMK10ELC0006

Installing the CT (Type II)

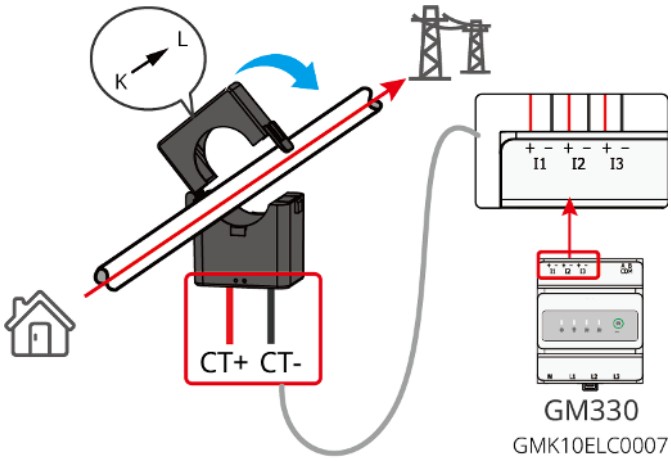

GMK10ELC0007

Wiring of GM3000

NOTICE
● Outer diameter of the AC cable should be smaller than the holes diameter of the CT, so that the AC cable can be routed through the CT. ● Ensure that the CT is connected in the correct direction and phase sequences, otherwise the monitoring data will be incorrect. ● To ensure accurate current detection, the CT cable is recommended to be shorter than 30m. ● Do not use network cable as the CT cable, otherwise the smart meter may be damaged due to high current. ● The CTs vary slightly in dimensions and appearance depending on the model, but they are installed and connected in the same way.

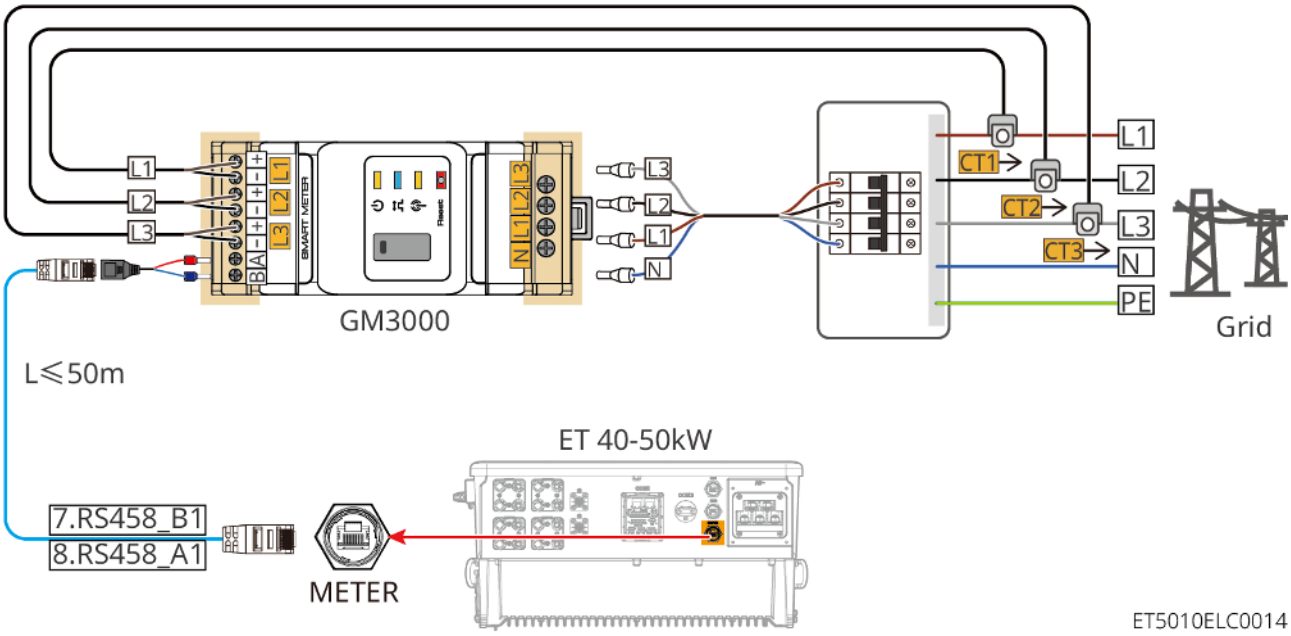

Connection steps

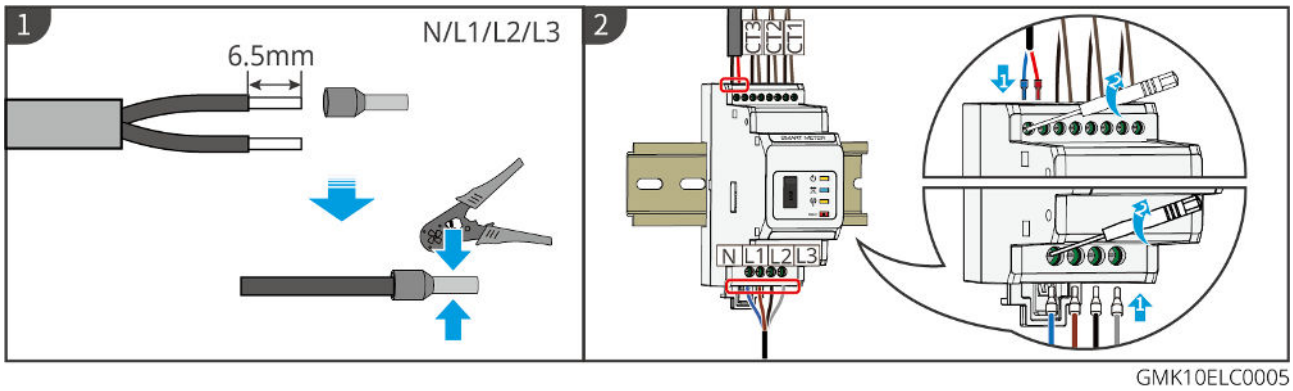

Install CT

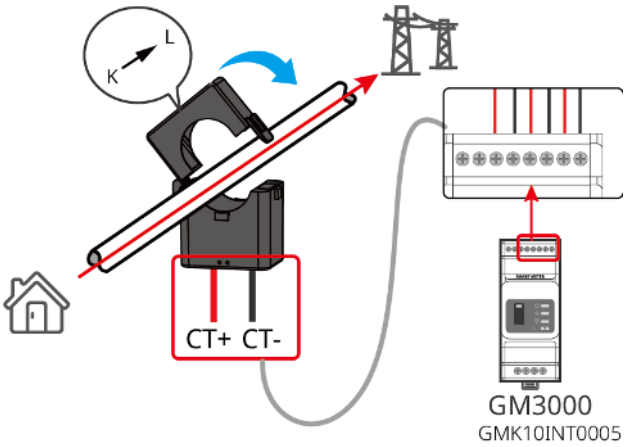

6.9 Connecting the Inverter Communication Cable

NOTICE
● The communication functions are optional. Connect the cables based on actual needs.

- Enable the DRED, RCR or remote shutdown function via SolarGo App after cable connections.
- If the inverter is not connected to the DRED device or remote shutdown device, do not enable these functions in the SolarGo App, otherwise the inverter cannot be connected to the grid for operation.
- To realize functions such as remote shutdown, DRED and RCR, the communication cable have to be connected to the master inverter. Otherwise, the functions cannot work properly.

Communication Descriptions

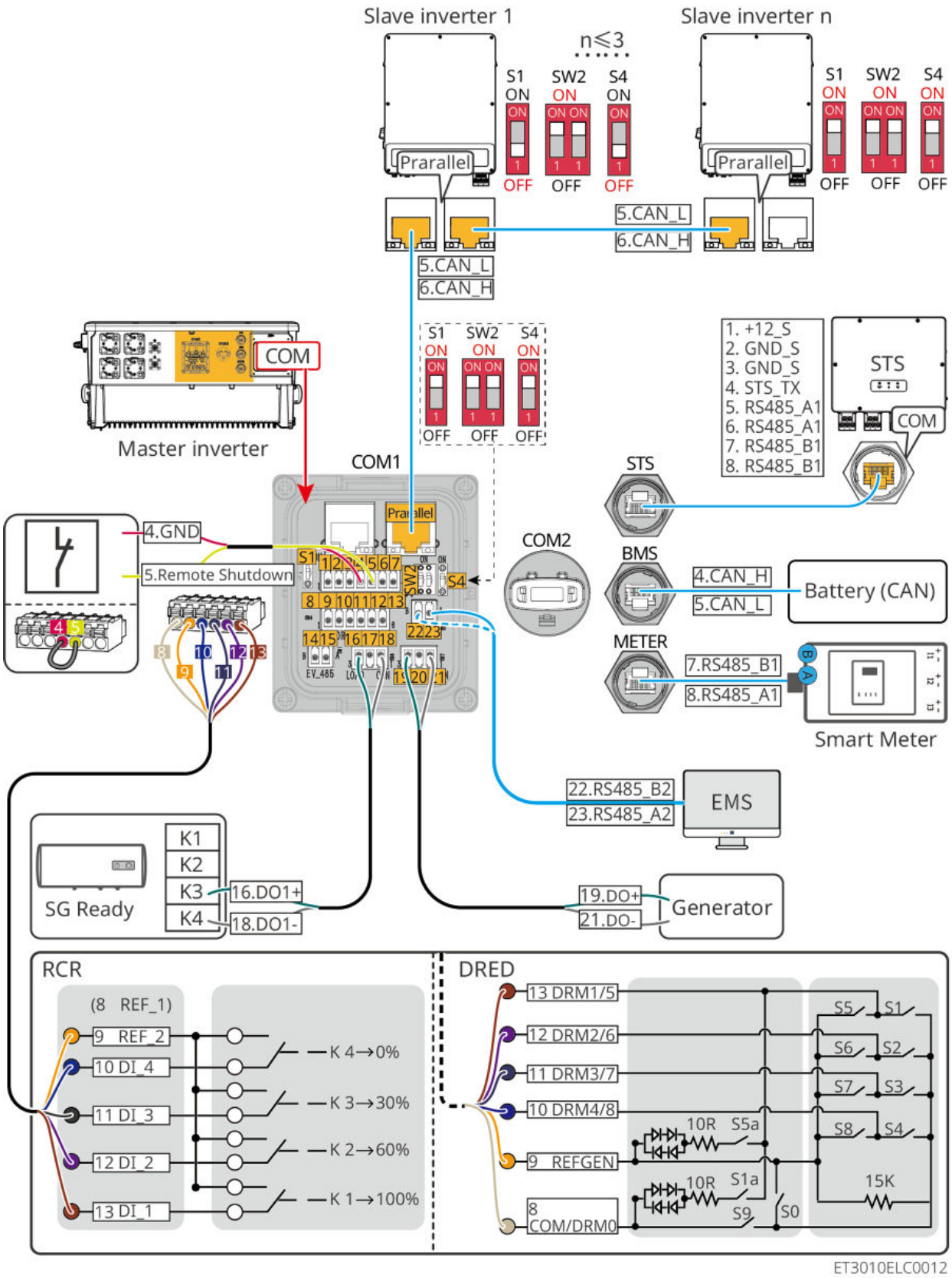

No.	Function	Description
1	Parallel communication port (Parallel)	CAN and BUS ports: parallel communication ports, use CAN communication to connect other inverters in the unit; use BUS bus to control the on grid and off grid status of each inverter in parallel

		system.
2	(Reserved) RSD port (12V AUX RSD Control)	After connecting to emergency stop device, when an accident occurs, the equipment can be controlled to shut down.
3	Remote Control port (Remote Control)	● When an accident occurs, the equipment can be controlled to shut down. ● When using RCR or DRED functions on the inverter, please short circuit DGND_S and IO1.
4	DRED or RCR function connection port (DRED/RCR)	● DRED (Demand Response Enabling Device): The inverter meets the Australian DRED certification requirements and provides a DRED signal control port. ● In Germany and some European regions, power grid companies use Ripple Control Receiver to convert power grid dispatch signals into dry contact mode for transmission, and power stations receive power grid dispatch signals through dry contact communication.
5	(Reserved) EV charger communication connection port (EV_485)	(reserved) Used for connecting EV charger RS485 communication cable.
6	Load control port (LOAD CON)	The inverter has a dry contact controlling port, which supports connecting additional contactors to enable/disable the load. The load control mode is turned off by default, and the dry contact signal is open circuit; after the load control mode is turned on, the dry contact signal becomes short circuit.
7	Generator start-stop control port (DIESEL GEN)	It supports the access of generator signal. The generator control mode is turned off by default, and the dry contact signal is open circuit; after the control mode is turned on, the dry contact signal becomes short circuit.
8	Energy management system connection port (EMS)	RS485 communication port used to connect third-party EMS devices.

9	STS communication port (STS)	Used to connect the STS communication cable.
10	Battery system communication port (BMS)	Connect the battery system CAN signal communication port.
11	Meter communication port (METER)	Using RS485 communication to connect smart meters.

Connecting the communication cable

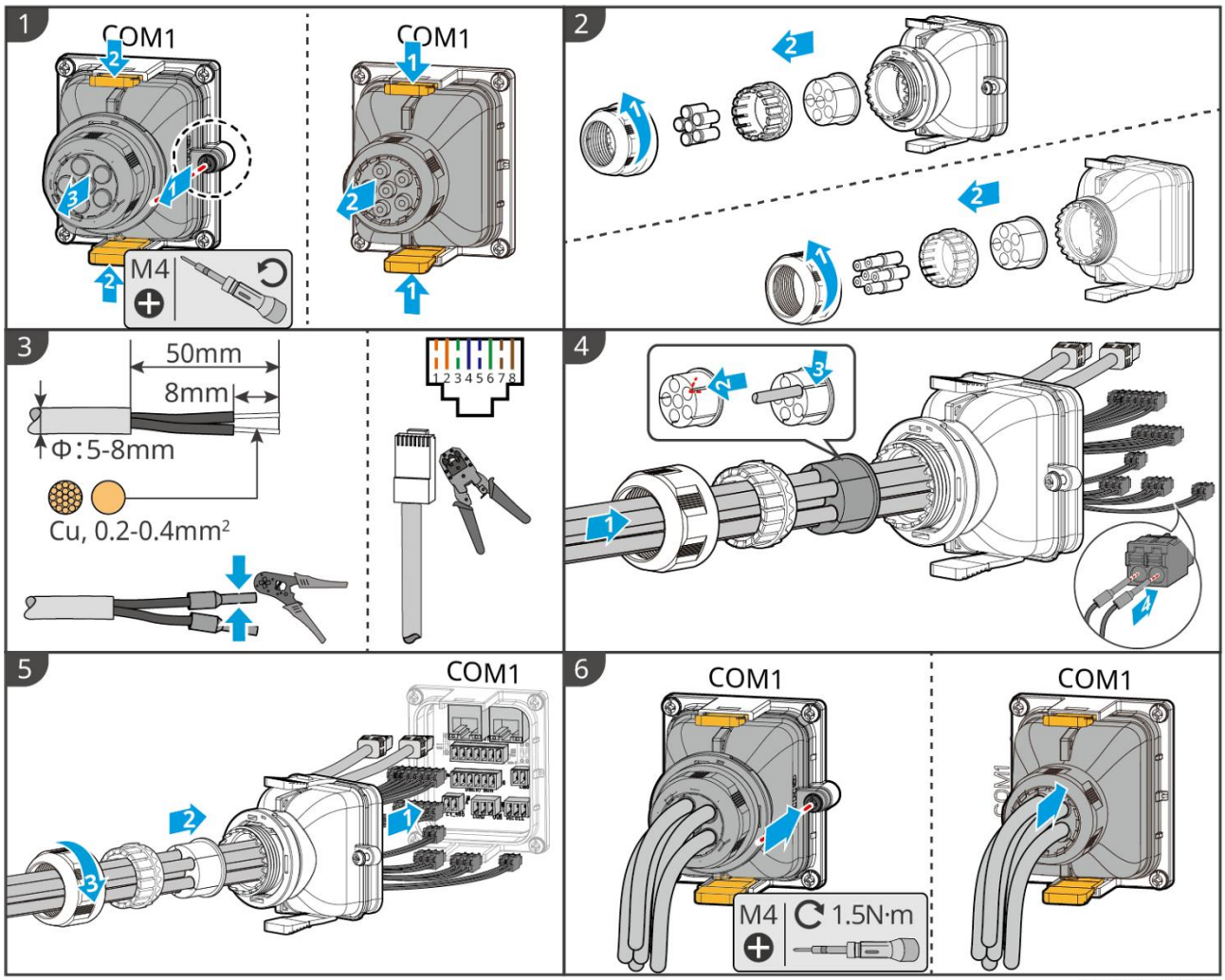

ET5010ELC0009

6.10 Connecting the Smart Dongle

NOTICE
● The inverter supports connecting to a mobile phone or WEB interface through an smart

dongle to set device related parameters, view device operation information and fault information, and observe system status in time.

- When multiple inverters are connected in a parallel system, the Ezlink3000 should be installed to the master inverter.
- WiFi/LAN Kit-20 can be used when there is only one inverter in an energy storage system.
- Install a WiFi/LAN Kit-20 or Ezlink3000 when the inverter is connected to the router through WiFi or LAN.

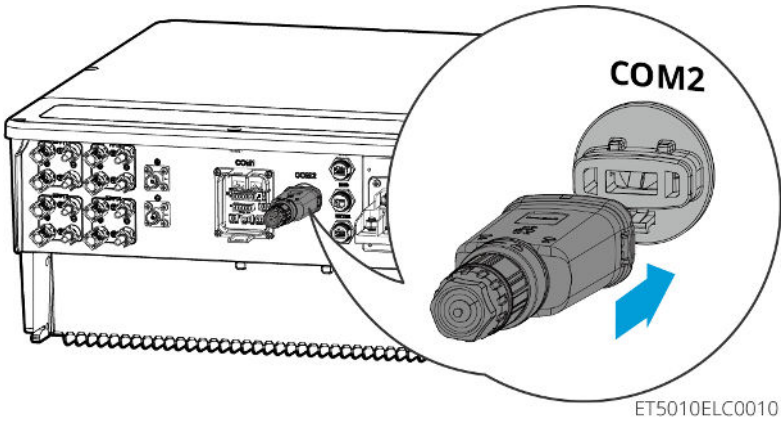

7 System Commissioning

7.1 Check before Power ON

No.	Port definition
1	The inverter is firmly installed in a clean place where is well-ventilated and easy to operate.
2	The PE, DC input, AC output, communication cables, and terminal resistors are connected correctly and securely.
3	Cable ties are intact, routed properly and evenly.
4	Unused cable holes are fitted using the waterproof nuts.
5	The used cable holes are sealed.
6	The voltage and frequency at the connection point meet the energy storage system grid connection requirements.

7.2 Power ON

WARNING

When power on the parallel system, make sure that all the AC breakers of the slave inverters are powered on within one minute after powering on the AC breaker of the master inverter.

NOTICE

If the inverter cannot work normally because there is no PV power generated or the power grid is abnormal, the battery black start function can be used to force the battery to charge and start the inverter. The inverter can enter the off-grid mode and the battery supplies power to the load.

GW51.2-BAT-I-G10, GW56.3-BAT-I-G10 black start process: press and hold RUN for 5s. If RUN is long on within 10 minutes, the battery system and the inverter establish communication, and the battery enters the off-grid working mode. If the RUN and FAULT indicators are off and a circuit breaker disconnection sound is heard, the black start fails. After the black start fails, reclose the circuit breaker and repeat the black start process. If it fails again, please contact GoodWe after-sales personnel.

7.2.1 Single inverter, on-grid, without BACK-UP function

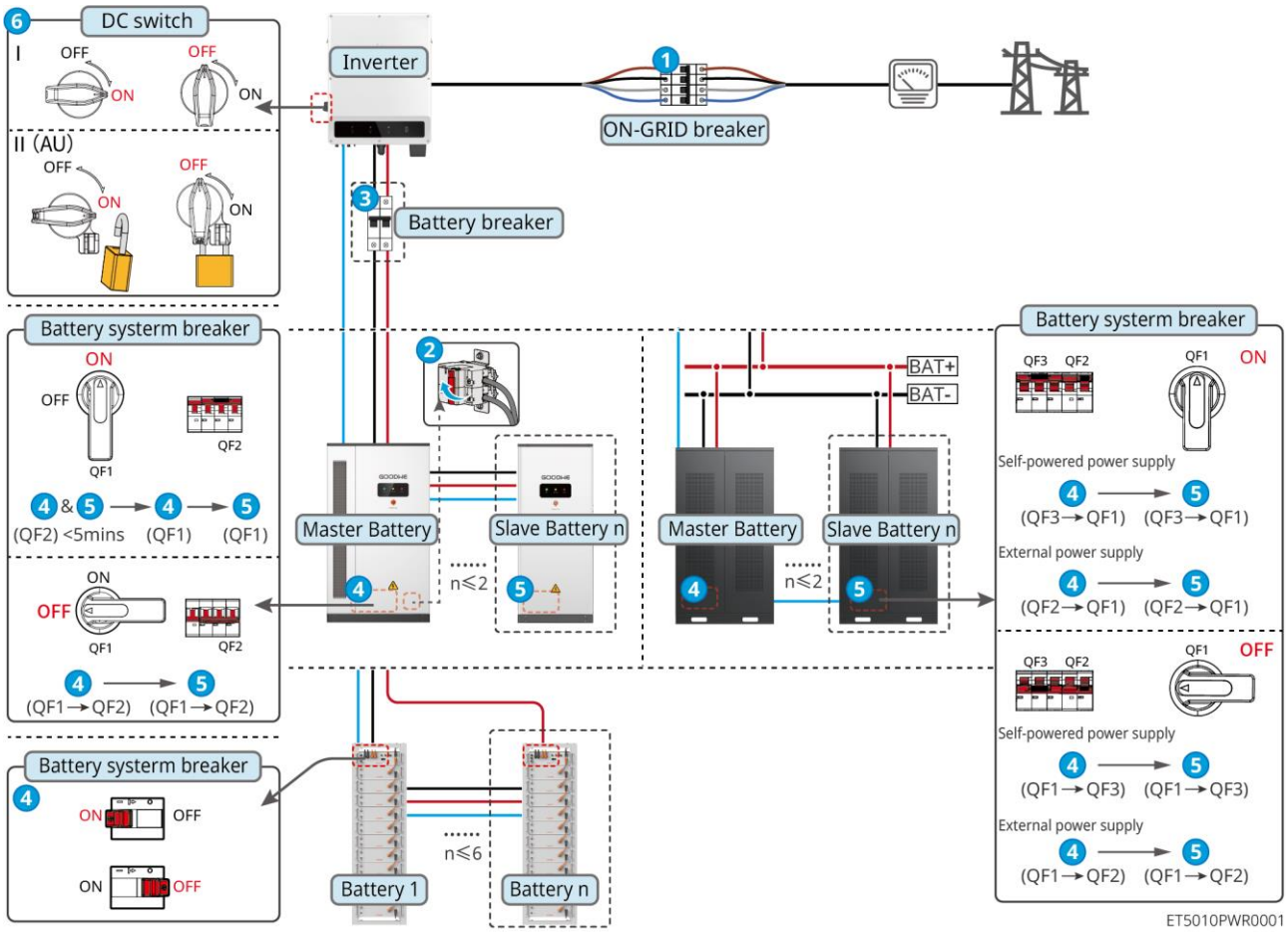

Power on the system: ❶→❷→❸→❹→❺→❻

❸: Optional in compliance with local laws and regulations

❺: Step 5 does not apply to GW51.2-BAT-I-G10 & GW56.3-BAT-I-G10

7.2.2 Single inverter, on-grid/off-grid, with BACK-UP function

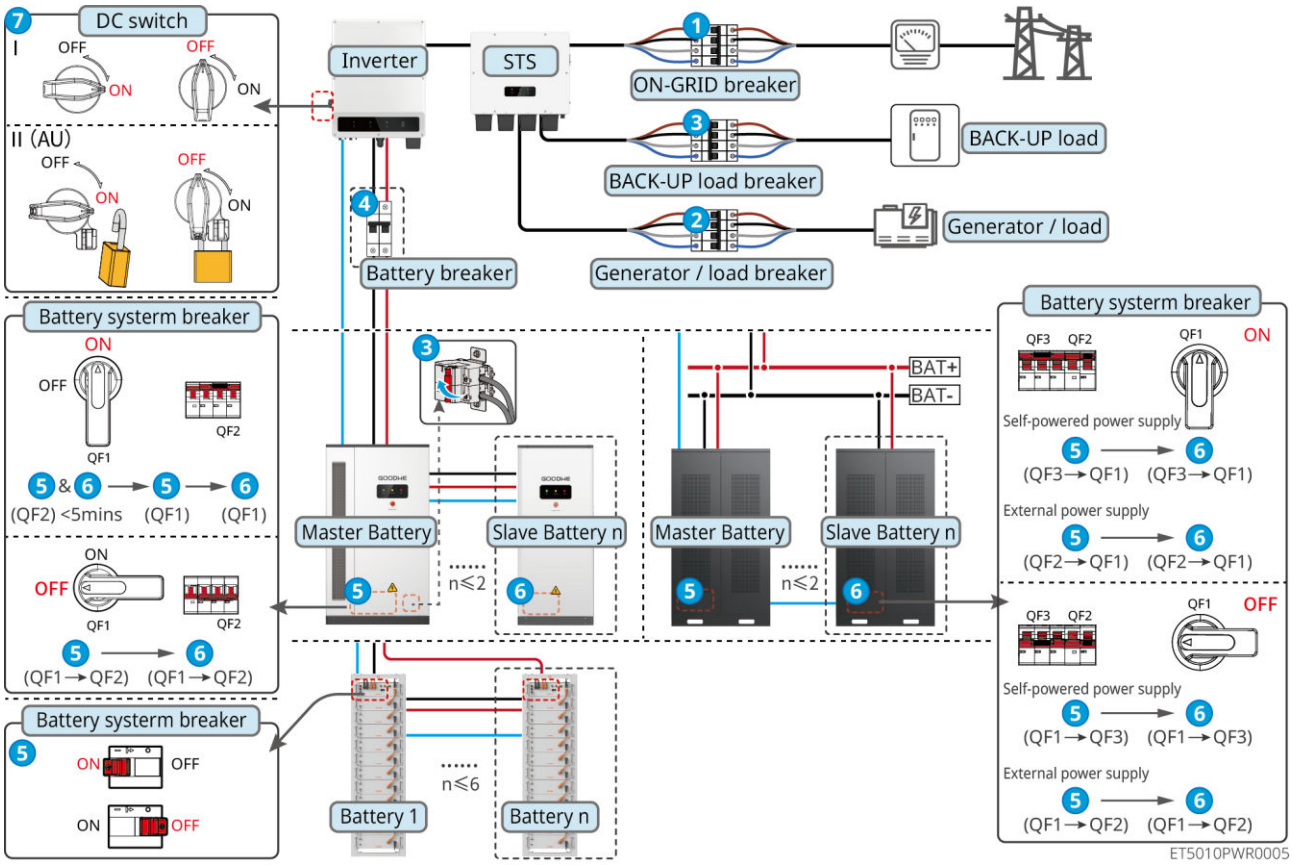

Power on the system: ❶ →❷ →❸ →❹ →❺ →❻ →❼

❹: Optional in compliance with local laws and regulations

❻: Step 6 does not apply to GW51.2-BAT-I-G10 & GW56.3-BAT-I-G10

7.2.3 Multiple-inverters in parallel, on-grid, without BACK-UP function

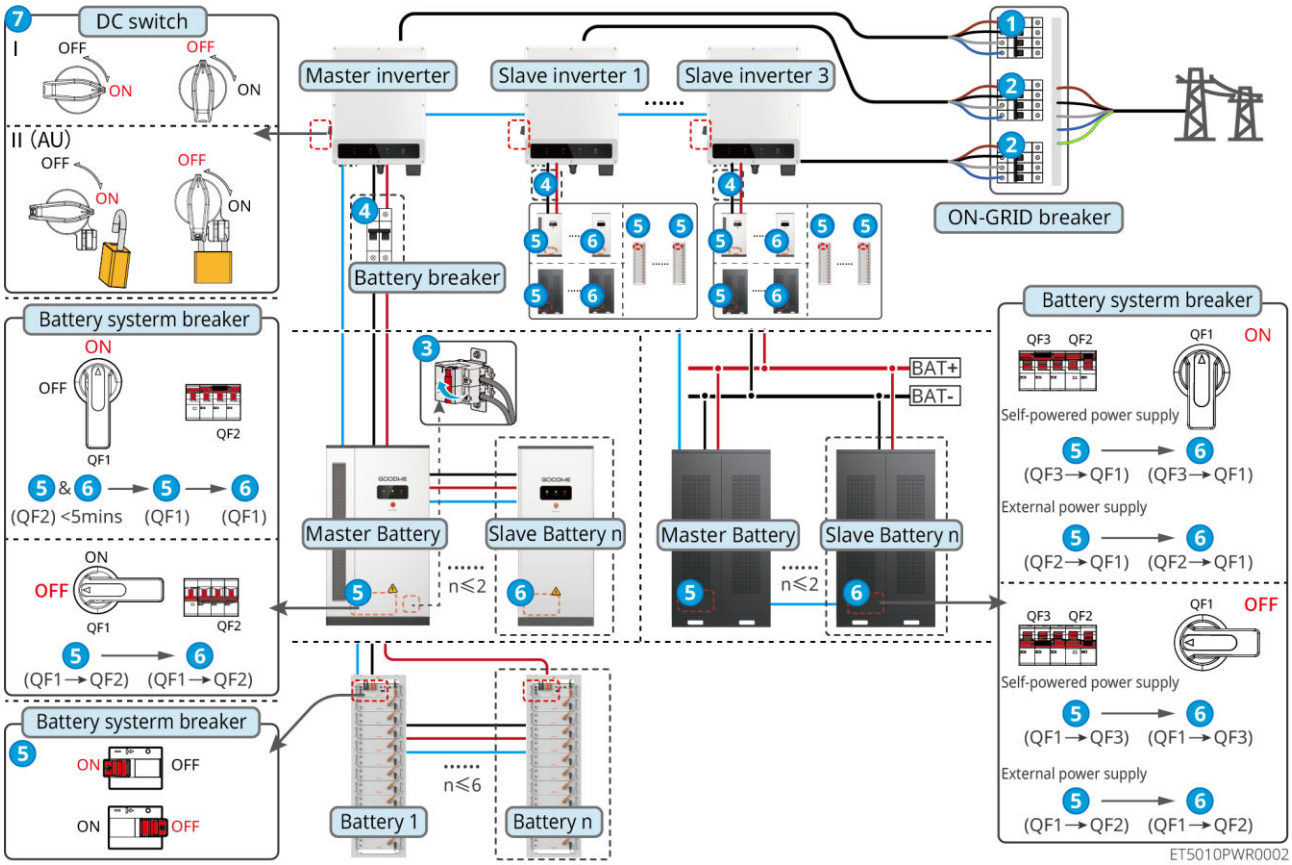

Power on the system: ❶ →❷ →❸ →❹ →❺ →❻ →❼

❹: Optional in compliance with local laws and regulations

❻: Step 6 does not apply to GW51.2-BAT-I-G10 & GW56.3-BAT-I-G10

7.2.4 Multiple-inverters in parallel, on-grid, BACK-UP ports are not parallel connected

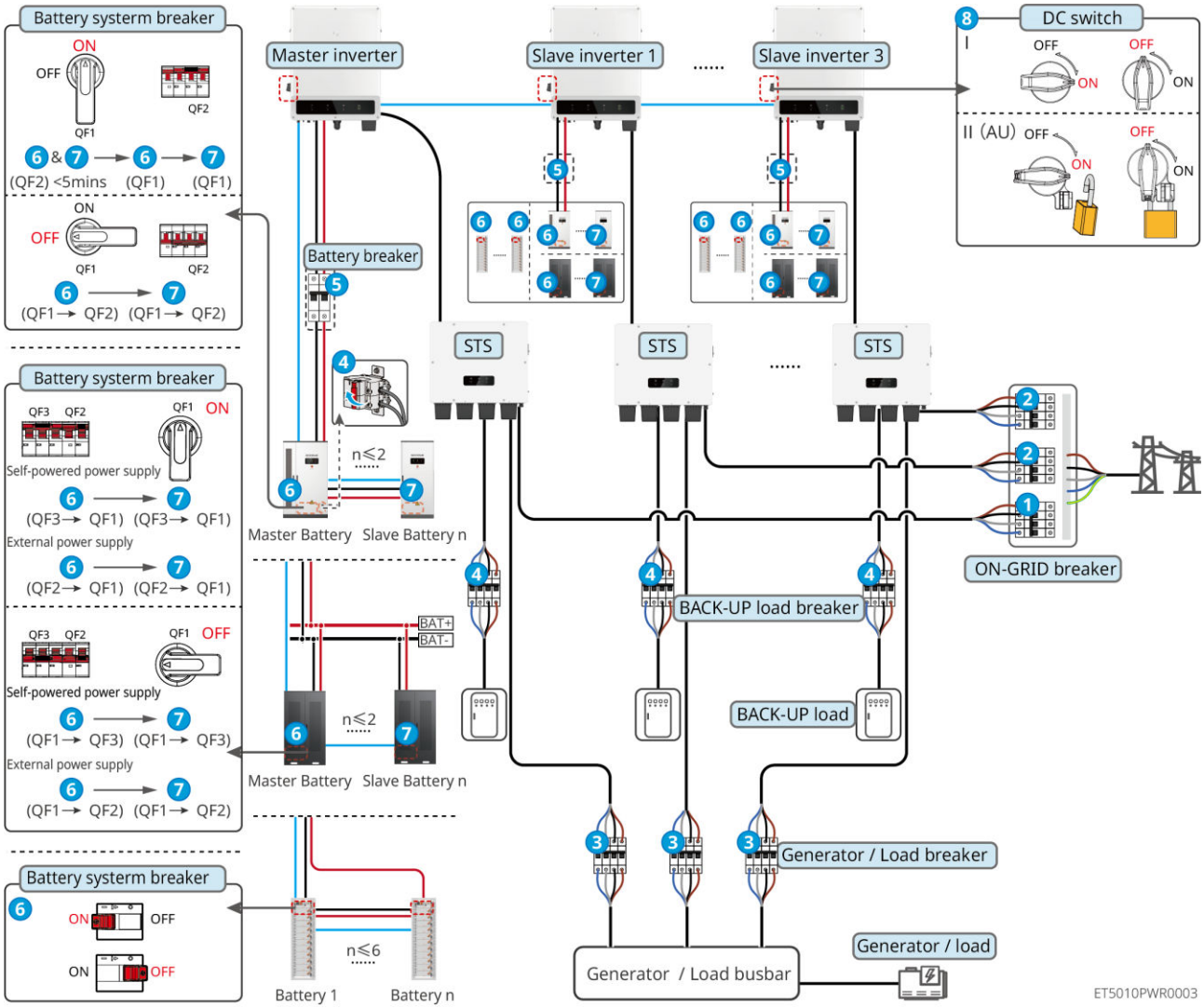

Power on the system: ❶ →❷ →❸ →❹ →❺ →❻ →❼ →❽

❺: Optional in compliance with local laws and regulations

❼: Step 7 does not apply to GW51.2-BAT-I-G10 & GW56.3-BAT-I-G10

7.2.5 Multiple-inverters in parallel, on-grid/off-grid, BACK-UP ports are parallel connected

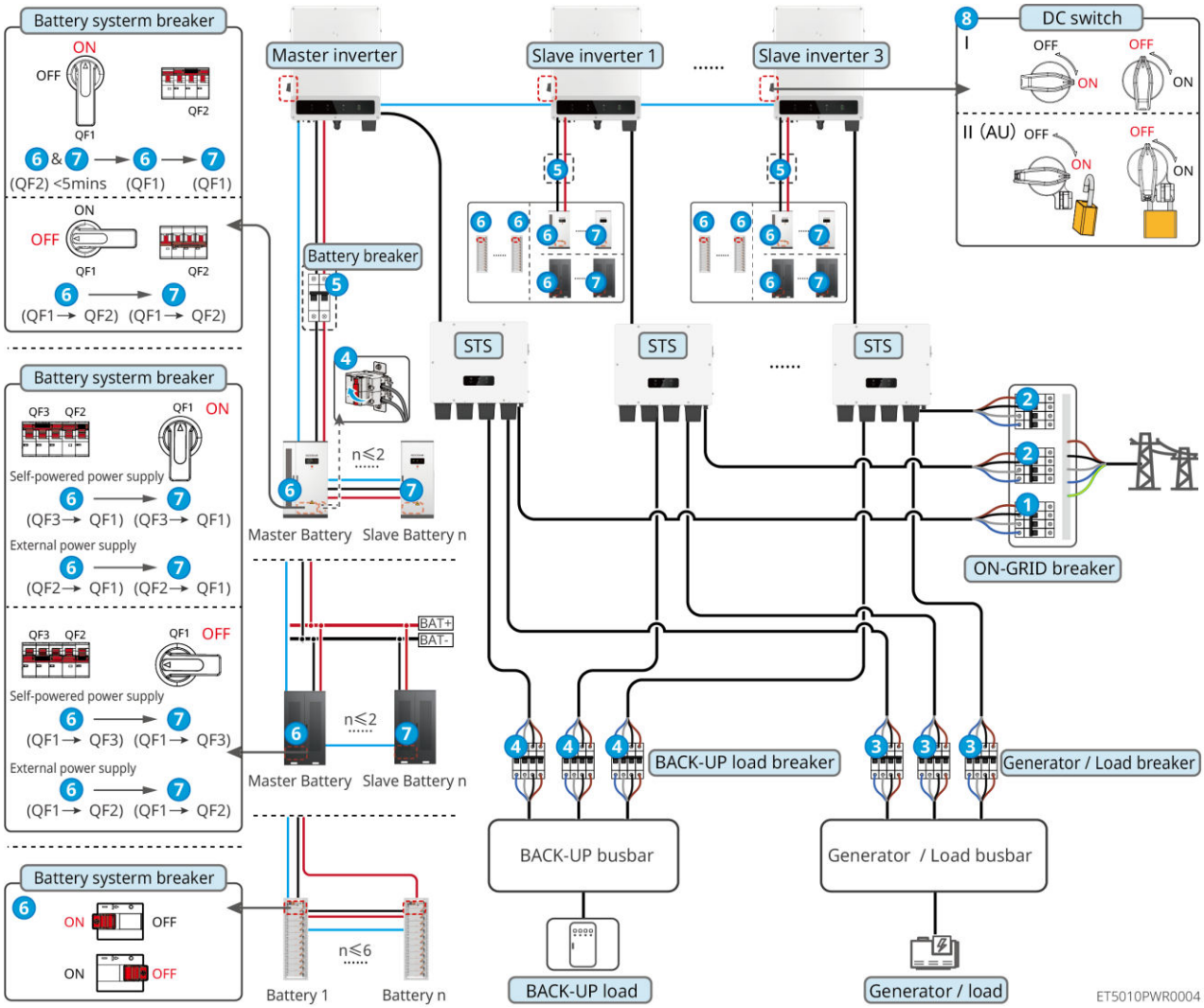

Power on the system: ❶ →❷ →❸ →❹ →❺ →❻ →❼ →❽

❺: Optional in compliance with local laws and regulations

❼: Step 7 does not apply to GW51.2-BAT-I-G10 & GW56.3-BAT-I-G10

7.3 Indicators

7.3.1 Inverter Indicators

Indicator	Status	Description
		The inverter is power on and in the standby mode.

		The inverter is starting up and in the self-check mode.
		The inverter is in normal operation under grid-tied or off-grid mode.
		BACK-UP output overload.
		A fault has occurred.
		The inverter is powered off.
		The grid is abnormal, and the power supply to the BACK-UP port of the inverter is normal.
		The grid is normal, and the power supply to the BACK-UP port of the inverter is normal.
		The BACK-UP port has no power supply
		The monitoring module of the inverter is resetting.
		The inverter fails to connect with the communication Termination.
		Communication fault between the communication Termination and Server.
		The monitoring of the inverter operates well.
		The monitoring module of the inverter has not been started yet.

Indicator	Description
	75% < SOC≤100%
	50% < SOC≤75%
	25% < SOC≤50%

	0% < SOC≤25%
	No battery connected
Indicator light blinking during battery discharging: for example, when the battery SOC is between 25% and 50%, the light at the 50% position blinks.	

7.3.2 STS Indicators

Indicator	Status	Description
BACK-UP		The energy storage system is in BACK-UP mode.
		The energy storage system is in ON-GRID mode.
		The energy storage system is in standby mode.
COM		STS power supply is normal and communication with the inverter is normal.
		STS power supply is normal, but communication with the inverter has failed.
		STS power supply is abnormal, and communication with the inverter has failed.
FAULT		A fault has occurred.
		No system fault.

7.3.3 Battery Indicators

LX C 101-10, LX C120-10, LX C138-10, LX C156-10

HRL

Button indicator	Battery system status
Steady green	The battery system is working properly.
Green light single flash	The battery system is in an idle state.
Green light double flashes	The battery system is in standby status.
Red light single flash	The battery system is mild alarming
Red light double flashes	The battery system is moderate alarming
Steady red	The battery system has malfunctioned.

GW100KWH-D-10, GW100KWH-D-10(Extension)

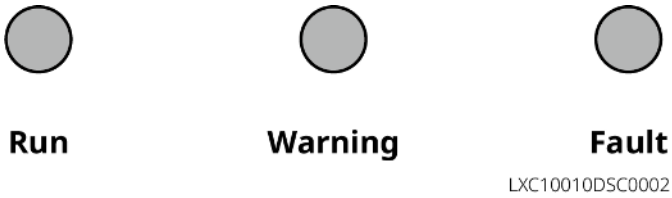

Indicator	Status	Description
Run		ON = The equipment is working properly.
		BLINK 1 = The battery is operating normally and not communicating with the inverter.
		BLINK 2 = The device is in standby mode.
		Green Light OFF, Yellow Light ON = The equipment is warning. Green Light OFF, Red Light ON = A fault has occurred. All Lights OFF = The equipment is not powered on.
		ON = The equipment is warning.

Warning		OFF = The equipment is not warning.
Fault		ON = A fault has occurred.
		Off: The equipment has no fault.

GW51.2-BAT-I-G10, GW56.3-BAT-I-G10

Indicator	Status	Description
Run		Green light on: The equipment is working properly.
		Green light flashes once: The battery is operating normally and not communicating with the inverter.
		Green light flashes twice: The device is in standby mode.
Fault		Red light on: A fault has occurred.
		Red light flashes once: Indicates 3~4 levels system undervoltage.
		Red light flashes twice: Indicates SN abnormality.

7.3.4 Smart Meter Indicator

GM330

Type	Status	Description
Power	Steady on	Power on, no RS485 communication.
	Blinks	Power on, RS485 communication works properly.
	Off	The smart meter is power off.
COM	Off	Reserved
	Blinks	Press the Reset button for more than 5 seconds, power light, buying or selling electricity indicator light

		flash: Reset the meter.
Importing or exporting indicator	ON	Importing from the grid.
	Blinks	Exporting to the grid.
	Off	Exporting to the grid.
	Reserved	

GM3000

Type	Status	Explanation
Power	Steady on	The smart meter is power on.
	Off	The smart meter is power off.
Importing or exporting indicator	ON	Importing from the grid.
	Blinks	Exporting to the grid.
COM	Blinks	Communication is OK.
	Blinking 5 times	● Press the Reset button for less than 3 seconds: Reset the meter. ● Press the Reset button for 5 seconds: Reset the meter parameters to factory settings. ● Press the Reset button for more than 10 seconds: Reset the meter parameters to factory settings, and reset the energy data to zero.
	Off	Meter has no communication connection.

7.3.5 Smart Dongle Indicator

WiFi/LAN Kit-20

NOTICE
● After double press the Reload button to turn on Bluetooth, the communication indicator light will switch to single flash. Please connect to the SolarGo App within 5 minutes or Bluetooth will turn off automatically. ● The single flash status of the communication indicator only appears after double-press the

Reload button to turn on Bluetooth.

Indicator	Status	Description
Power		Steady on The smart dongle is powered on.
		Off: The smart dongle is powered off.
COM		Steady on The WiFi or LAN communication is working well.
		Single blink The Bluetooth signal is on and waiting for connection to the app.
		Double blinks The Smart Dongle is not connected to the router.
		Four blinks The Smart Dongle is communicating with the router but not connected to the server.
		Six blinks The smart dongle is identifying the connected device.
		Off: The software of the Smart Dongle is in reset or not powered on.

Indicator	Color	Status	Description
Communication indicator in LAN Port	Green	ON	The connection of the wired network at 100Mbps is normal.
		Off	● The Ethernet cable is not connected. ● The connection of the wired network at 100Mbps is abnormal. ● The connection of the wired network at 10Mbps is normal.
	Yellow	ON	The connection of the wired network at 10Mbps is normal, but no communication data is received or transmitted.
		Blinks	The communication data is being transmitted or received.
		Off	The Ethernet cable is not connected.

Button	Description
Reload	Press and hold for 0.5 to 3 seconds to reset the Smart Dongle.
	Press and hold for 6 to 20 seconds to restore the Smart Dongle to factory settings.
	Double press quickly to activate Bluetooth signal (only lasts for 5 minutes).

Ezlink3000

Indicator/silkscreen	Color	Status	Description
Power	Blue		Blink = The Ezlink is working properly.
			OFF = The Ezlink is powered off.
COM	Green		ON = The Ezlink is connected to the server.
			Blink 2 = The Ezlink is not connected to the router.
			Blink 4 = The Ezlink is connected to the router, but not connected to the server.
RELOAD	-	-	● Short press for 3s to restart the Ezlink. ● Long press for 3-10s to restore factory settings.

7.4 Closing the Cabinet Door

WARNING
After the system is powered on, please close the battery cabinet door.

LX C 101-10, LX C120-10, LX C138-10, LX C156-10

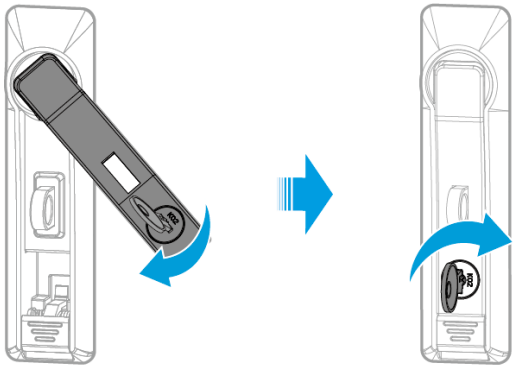

LXC10110INT0004

GW100KWH-D-10, GW100KWH-D-10(Extension)

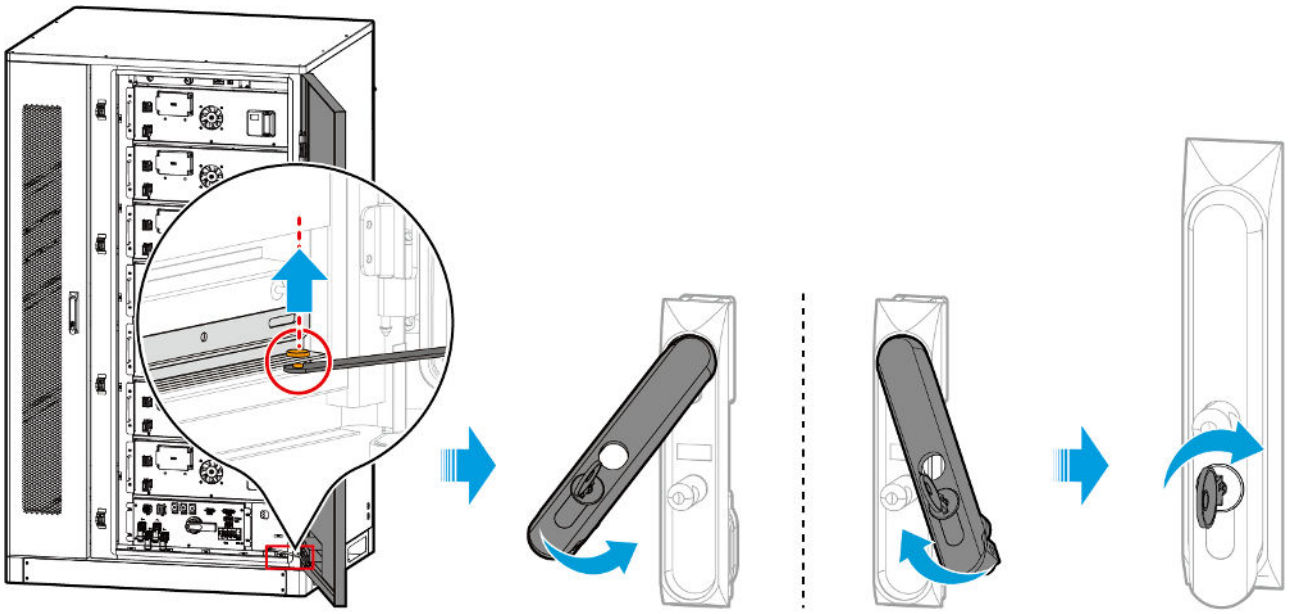

LXC10010INT0008

8 Quick System Commissioning

NOTICE
If the single energy storage system has been operated, it is required to ensure that the parameter settings of all energy storage systems are the same before forming a parallel system; Otherwise, the parallel system parameter setting may fail.

8.1 Downloading the App

Make sure that the mobile phone meets the following requirements before downloading the SolarGo App or SEMS Portal App:

- Mobile phone operating system: Android 4.3 or later, iOS 9.0 or later.
- The mobile phone can access the Internet.
- The mobile phone supports WLAN or Bluetooth.

Method 1: Search SolarGo in Google Play (Android) or App Store (iOS) to download and install the App.

Method 2: Scan the QR code below to download and install the app.

8.2 Connecting the Inverter

NOTICE
The device name varies depending on the inverter model or smart dongle type: ● WiFi/LAN Kit-20: WLA-*** ● Ezlink3000: CCM-BLE***: CCM-***: ***

Connect to the inverter via Bluetooth

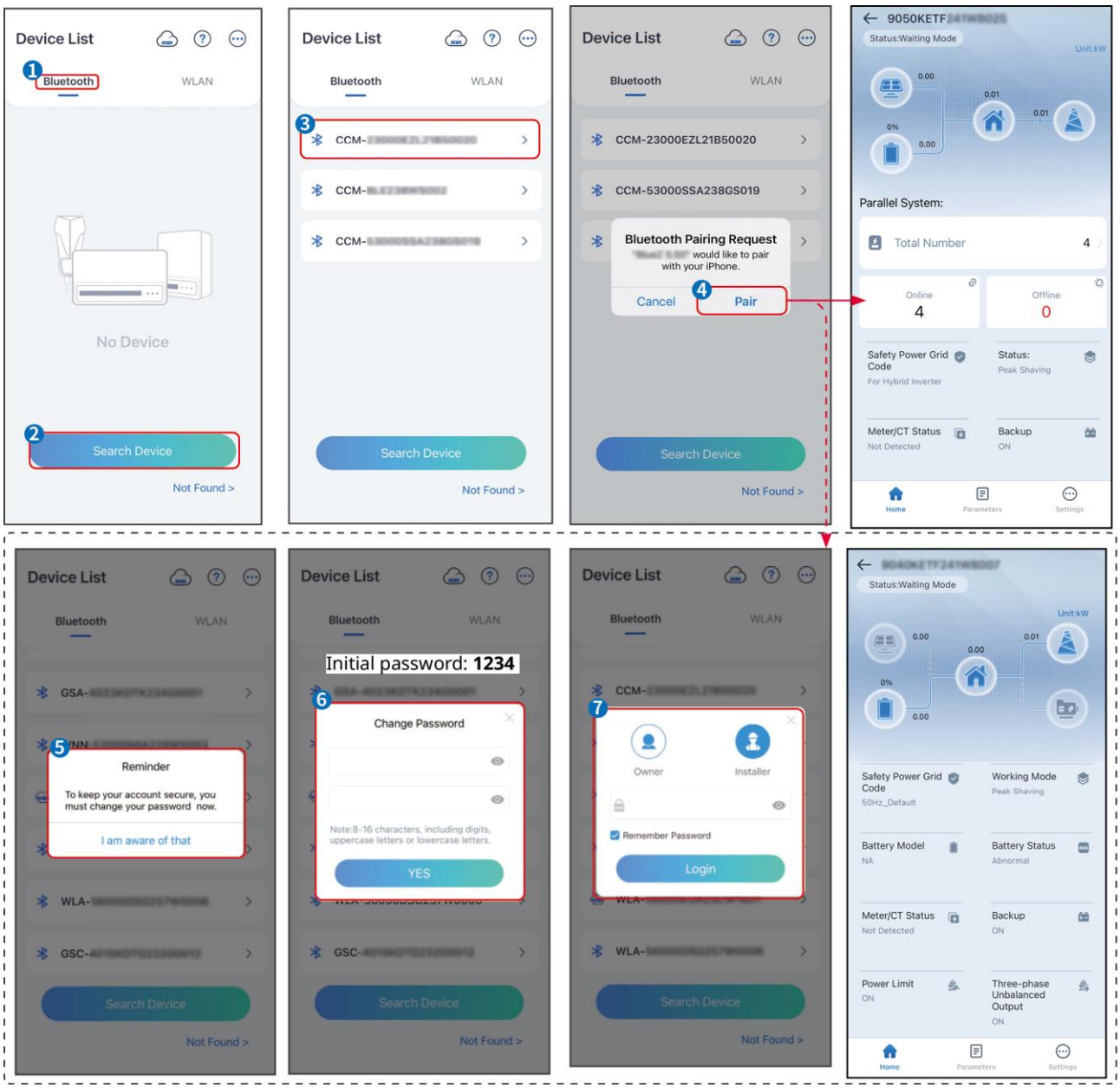

8.3 Communication Settings

NOTICE
The communication configuration interface may vary depending on the type of smart dongle connected to the inverter. Please refer to the actual interface for accurate information.

Set privacy and security parameters

Type 1

Step 1 Tap **Home** > **Settings** > **Communication Setting** > **Privacy & Security** to set the parameters.

Step 2 Set new WiFi hotspot password of the smart dongle according to actual needs, and click Save to complete the setting.

Step 3 Open the WiFi settings on your phone and use the new password to connect to the WiFi signal of the inverter.

Type 2

Step 1 Tap **Home** > **Settings** > **Communication Setting** > **Privacy & Security** to set the parameters.

Step 2 Keep Bluetooth continuous on and enable WLAN control function according to actual needs.

Setting WLAN/LAN

Step 1 Tap **Home** > **Settings** > **Communication Settings** > **Network Settings** to set the parameters.

Step 2 Set the WLAN or LAN parameters based on actual situation.

No.	Name/Icon	Description
1	Network Name	Only for WLAN. Please select the corresponding network according to the actual situation and communicate the device with the router or switch.
2	Password	Only for WLAN. Enter the password for the network you have chosen.
3	DHCP	● Enable DHCP when the router is in dynamic IP mode. ● Disable DHCP when a switch is used or the router is in static IP mode.
4	IP Address	● Do not configure the parameters when DHCP is enabled. ● Configure the parameters according to the router or switch information when DHCP is disabled.
5	Subnet Mask	
6	Gateway address	

7	DNS Server	

8.4 Wiring Method Setting

WARNING

Do not set the Wiring Method if the inverter is installed for the first time and only one inverter is applied.

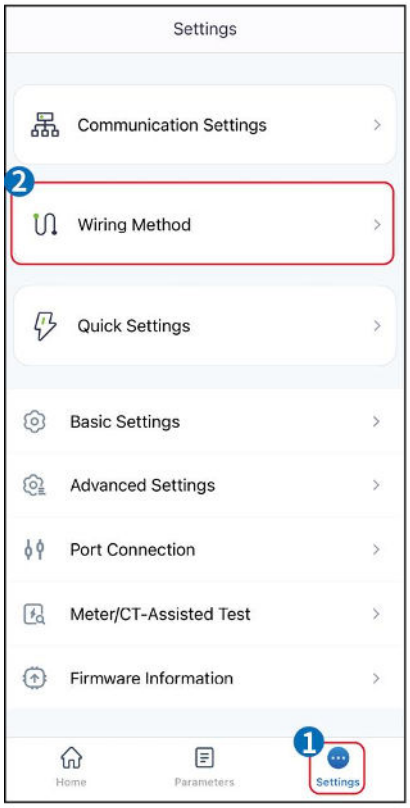

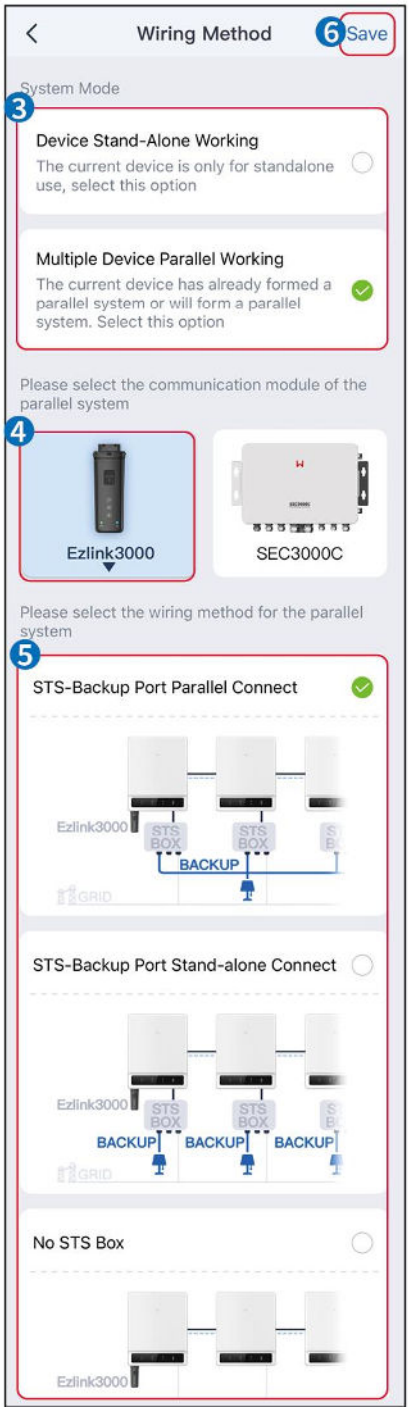

8.5 Quick Settings

NOTICE
● The parameters will be configured automatically after selecting the safety country/region, including overvoltage protection, undervoltage protection, overfrequency protection, underfrequency protection, voltage/frequency connection protection, cosφ curve, Q(U) curve, P(U) curve, FP curve, HVRT, LVRT, etc. ● The power generation efficiency of the inverter varies in different working modes. Please set according to the local actual power usage.

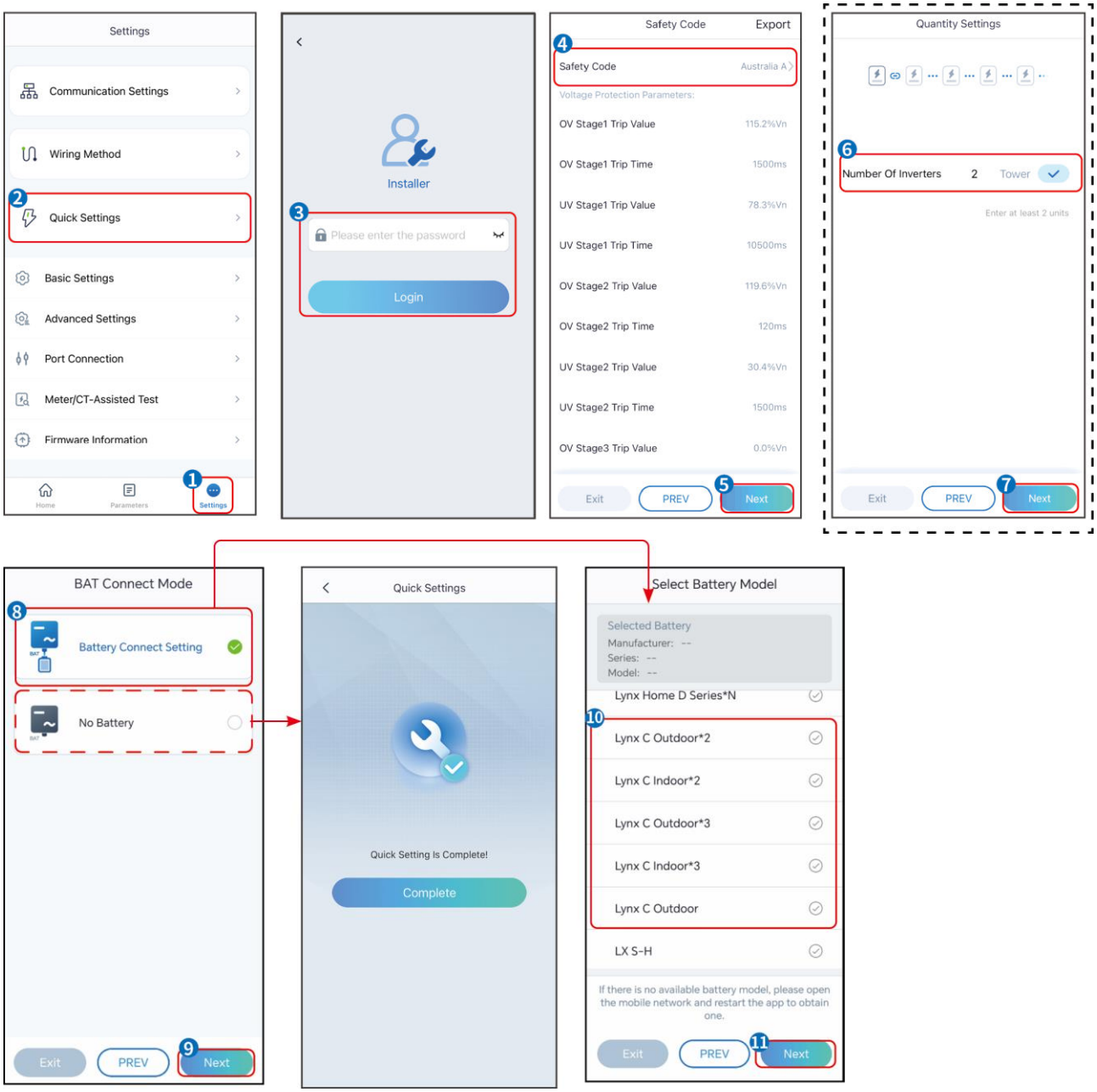

Parameters	Description
Safety Code	Select safety country accordingly.
BAT Connect Mode	Select the actual mode in which the battery is connected to the inverter. If there is no battery connected to the system, there is no need to configure the battery model and working mode, and the equipment will operate in the self-use mode by default.
Select Battery Model	Select the actual battery model.
Working Mode	Set the working mode when the device is running. Support: peakshaving mode, self-use mode.

When the self-use mode is selected, the interface will be displayed as follows. You need to enter the advanced mode to select the specific working mode and set the corresponding parameter values.

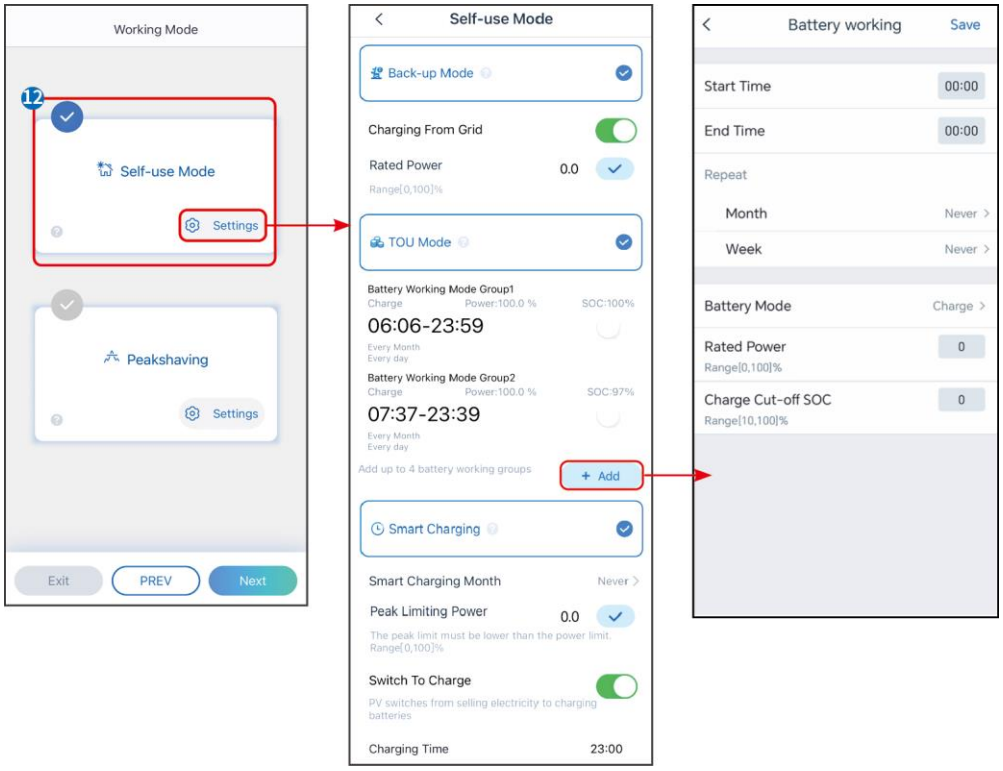

Parameters	Description
When the working mode is set to self-use mode, on the basis of this mode, back-up mode, TOU mode, and smart charging mode can be simultaneously selected, and the inverter will automatically select the corresponding mode to work. Working priority: **Back-up mode**> **TOU mode** >**Smart charging mode** > **Self-use mode**.	

BACK-UP mode (It works only when the inverter is used with STS.)	
Purchase electricity from the grid for charging.	Enabling this function allows the system to purchase electricity from the power grid.
Rated Power	The percentage of the purchasing power to the rated power of the inverter.
TOU mode	
Start Time	Within the Start Time and End Time, the battery is charged or discharged according to the set Battery Mode as well as the Rated Power.
End Time	
Battery Mode	Set it to charge or discharge mode based on actual needs.
Rated Power	The percentage of the charging/discharging power to the rated power of the inverter.
Charge Cut-off SOC	The battery stop charging/discharging once the battery SOC reaches Charge Cut-off SOC.
Smart charging mode	
Smart Charging Month	Set the smart charging months. More than one month can be set.
Peak Limiting Power	Set the Peak Limiting Power in compliance with local laws and regulations. The Peak Limiting Power shall be lower then the output power limit specified by local requirements.
Switch to Charge	During charging time, the PV power will charge the battery.

The app interface is as following when Peakshaving mode is selected.

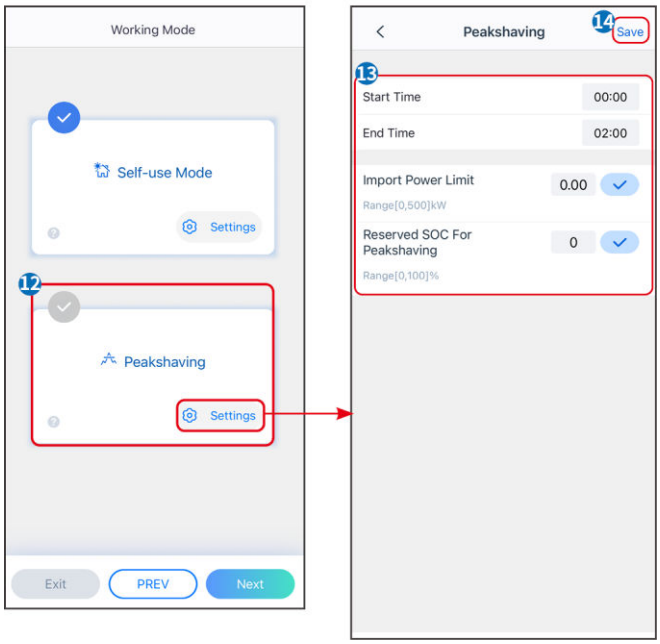

Parameters	Description
Peakshaving	
Start Time	The utility grid will charge the battery between Start Time and End Time if the load power consumption do not exceed the power quota. Otherwise, only PV power can be used to charge the battery.
End Time	
Import Power Limit	Set the maximum power limit allowed to purchase from the grid. When the loads consume power exceed the sum of the power generated in the PV system and Import Power Limit, the excess power will be made up by the battery.
Reserved SOC For Peakshaving	In Peak Shaving mode, the battery SOC should be lower than Reserved SOC For Peakshaving. Once the battery SOC is higher than Reserved SOC For Peakshaving, the peak shaving mode fails.

Tap **Complete** to complete the settings, restart the equipment following the prompts.

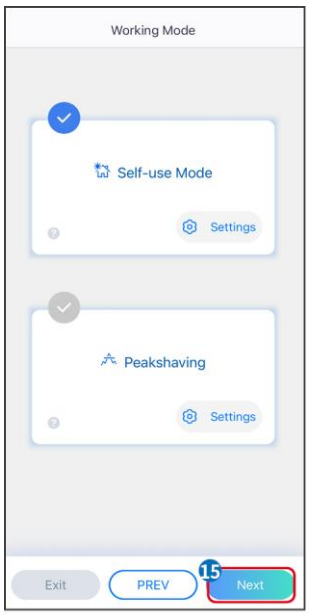
Working Mode
Self-use Mode
Settings
Peakshaving
Settings
Exit
PREV
15
Next

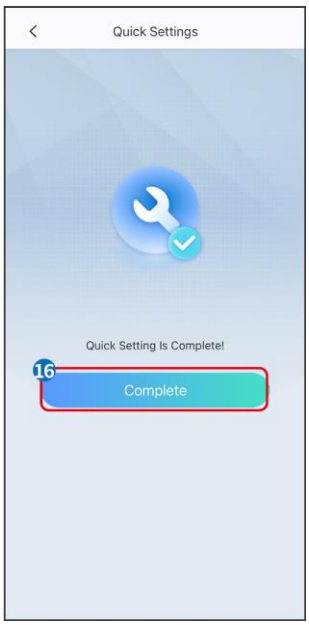
Quick Settings
Quick Setting Is Complete!
16
Complete

8.6 Creating Power Plants

NOTICE
Login to the SEMS Portal App using the account and password before creating power plants. If you have any questions, refer to the Plant Monitoring section.

Step 1 Enter the **Create Plant** page.

Step 2 Read the instructions and fill in the requested plant information based on actual situation. (* refers to the mandatory items)

Step 3 Follow the prompts to add devices and create the plant.

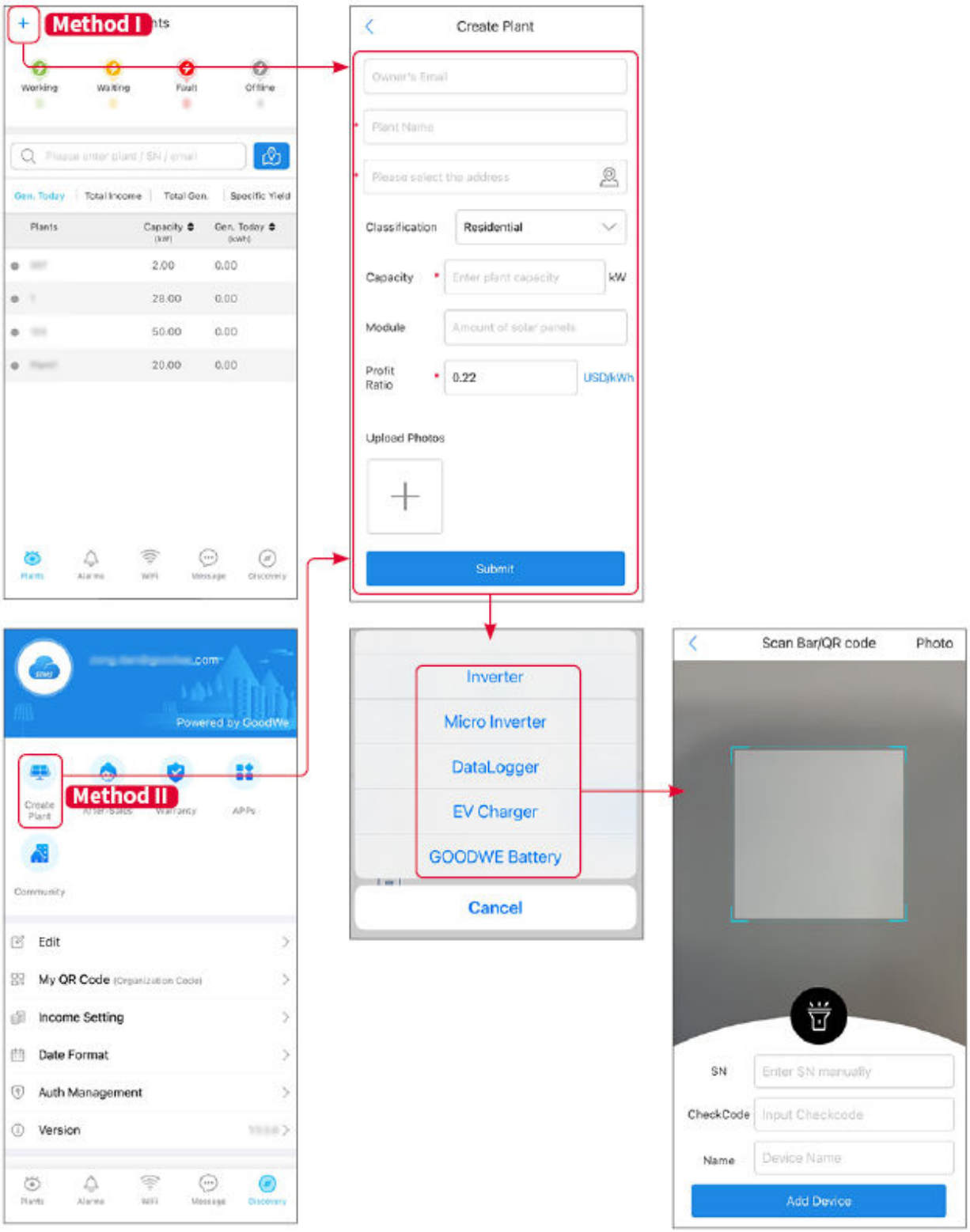
Method I
Working
Waiting
Fault
Offline
Gen. Today
Total Income
Total Gen.
Specific Yield
Plants
Capacity
Gen. Today
Create Plant
Owner's Email
Plant Name
Please select the address
Classification
Residential
Capacity
Enter plant capacity
kW
Module
Amount of solar panels
Profit Ratio
0.22
USD/kWh
Upload Photos
Submit
Method II
Powered by GoodWe
Create Plant
APPs
Community
Edit
My QR Code
Income Setting
Date Format
Auth Management
Version
Inverter
Micro Inverter
DataLogger
EV Charger
GOODWE Battery
Cancel
Scan Bar/QR code
Photo
SN
Enter SN manually
CheckCode
Input Checkcode
Name
Device Name
Add Device

9 System Commissioning

NOTICE
If the single energy storage system has been operated, it is required to ensure that the parameter settings of all energy storage systems are the same before forming a parallel system; Otherwise, the parallel system parameter setting may fail.

9.1 SolarGo Overview

SolarGo App is a mobile application that communicates with the inverter through Bluetooth or WiFi modules. Commonly used functions are as follows:

1. Check the operating data, software version, alarms, etc.
2. Set grid parameters, communication parameters, safety countries, power limitation, etc.
3. Equipment maintenance.
4. Upgrade the firmware version of the equipment.

9.1.1 Menu Structure of the App

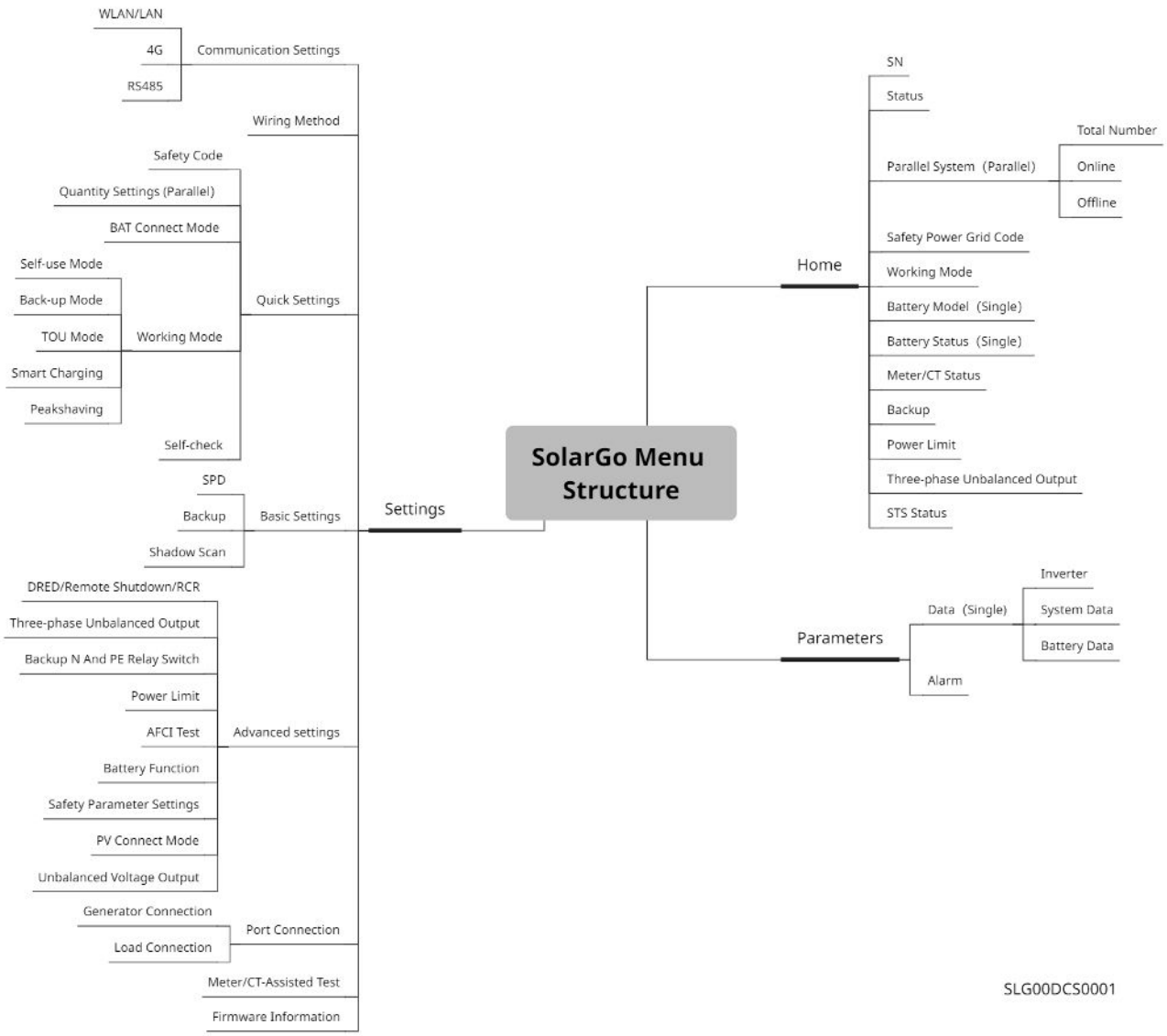
SolarGo Menu Structure
Settings
Communication Settings
WLAN/LAN
4G
RS485
Wiring Method
Quick Settings
Safety Code
Quantity Settings (Parallel)
BAT Connect Mode
Working Mode
Self-use Mode
Back-up Mode
TOU Mode
Smart Charging
Peakshaving
Self-check
Basic Settings
SPD
Backup
Shadow Scan
Advanced settings
DRED/Remote Shutdown/RCR
Three-phase Unbalanced Output
Backup N And PE Relay Switch
Power Limit
AFCI Test
Battery Function
Safety Parameter Settings
PV Connect Mode
Unbalanced Voltage Output
Port Connection
Generator Connection
Load Connection
Meter/CT-Assisted Test
Firmware Information
Home
SN
Status
Parallel System (Parallel)
Total Number
Online
Offline
Safety Power Grid Code
Working Mode
Battery Model (Single)
Battery Status (Single)
Meter/CT Status
Backup
Power Limit
Three-phase Unbalanced Output
STS Status
Parameters
Data (Single)
Inverter
System Data
Battery Data
Alarm
SLG00DCS0001

9.1.2 Login Page of SolarGo App

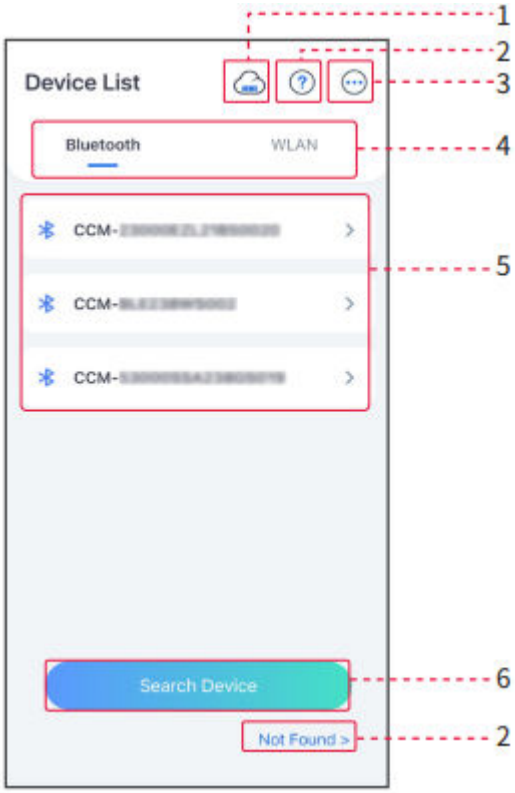

No.	Name/Icon	Description
1	SEMS	Tap the icon to open the page downloading the SEMS Portal App.
2	? Not found	Tap to read the connection guide.
3	•••	● Check information such as app version, local contacts, etc. ● Other settings, such as update date, switch language, set temperature unit, etc.
4	Bluetooth/WLAN	Select based on actual communication method. If you have any problems, tap or NOT Found to read the connection guides.
5	Device List	● The list of all devices. The last digits of the device name are normally the serial number of the device. ● Select the device by checking the serial number of the master inverter when multi inverters are parallel connected. ● The device name varies depending on the inverter model or

		communication module.
6	Search Device	Tap Search Device if the device is not found.

9.1.3 Home Page of SolarGo App

Single Inverter Multiple Inverters

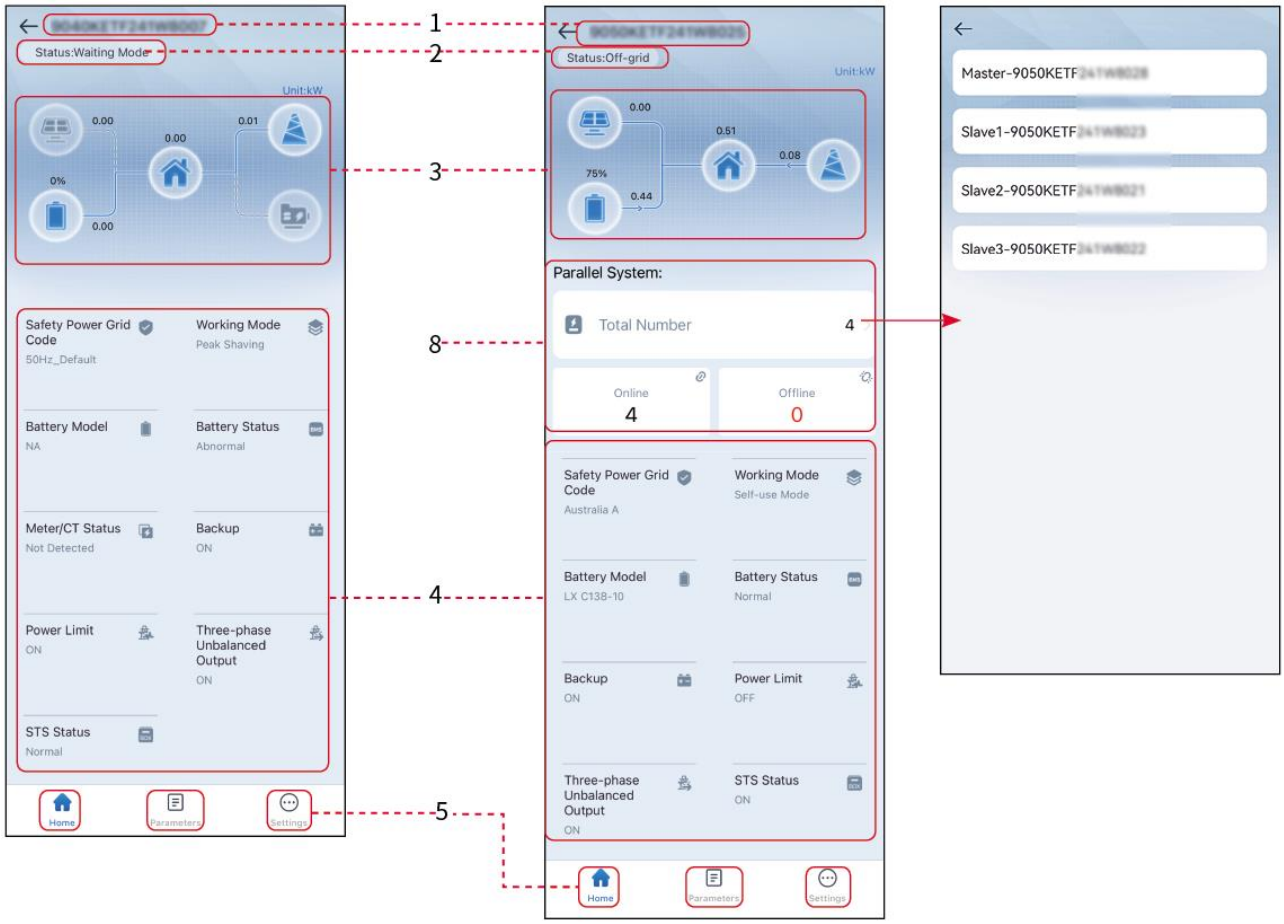

No.	Name/Icon	Description
1	Serial Number	Serial number of the connected inverter or serial number of the master inverter in the parallel system.
2	Device Status	Indicates the status of the inverter, such as Working, Fault, etc.
3	Energy Flow Chart	Indicates the energy flow chart of the PV system. The actual page prevails.
4	System Status	Indicates the system status, such as Safety Code, Working Mode, Battery Model, Battery Status, Power Limit, Three-Phase Unbalanced Output, etc.

5	Home	Home. Tap Home to check Serial Number, Device Status, Energy Flow Chart, System Status, etc.
6	Parameters	Tap Parameters to check the running parameters of the system.
7	Settings	Log in before entering Quick Settings and Advanced Settings. Initial password: goodwe2010 or 1111.
8	Parallel	Tap Total Number to check serial number of all inverters. Tap the serial number to enter the setting page of the single inverter.

9.2 Connecting the Inverter

NOTICE
The device name varies depending on the inverter model or communication module: ● WiFi/LAN Kit-20: WLA-*** ● Ezlink3000: CCM-BLE***: CCM-***: ***

Connect to the inverter via Bluetooth

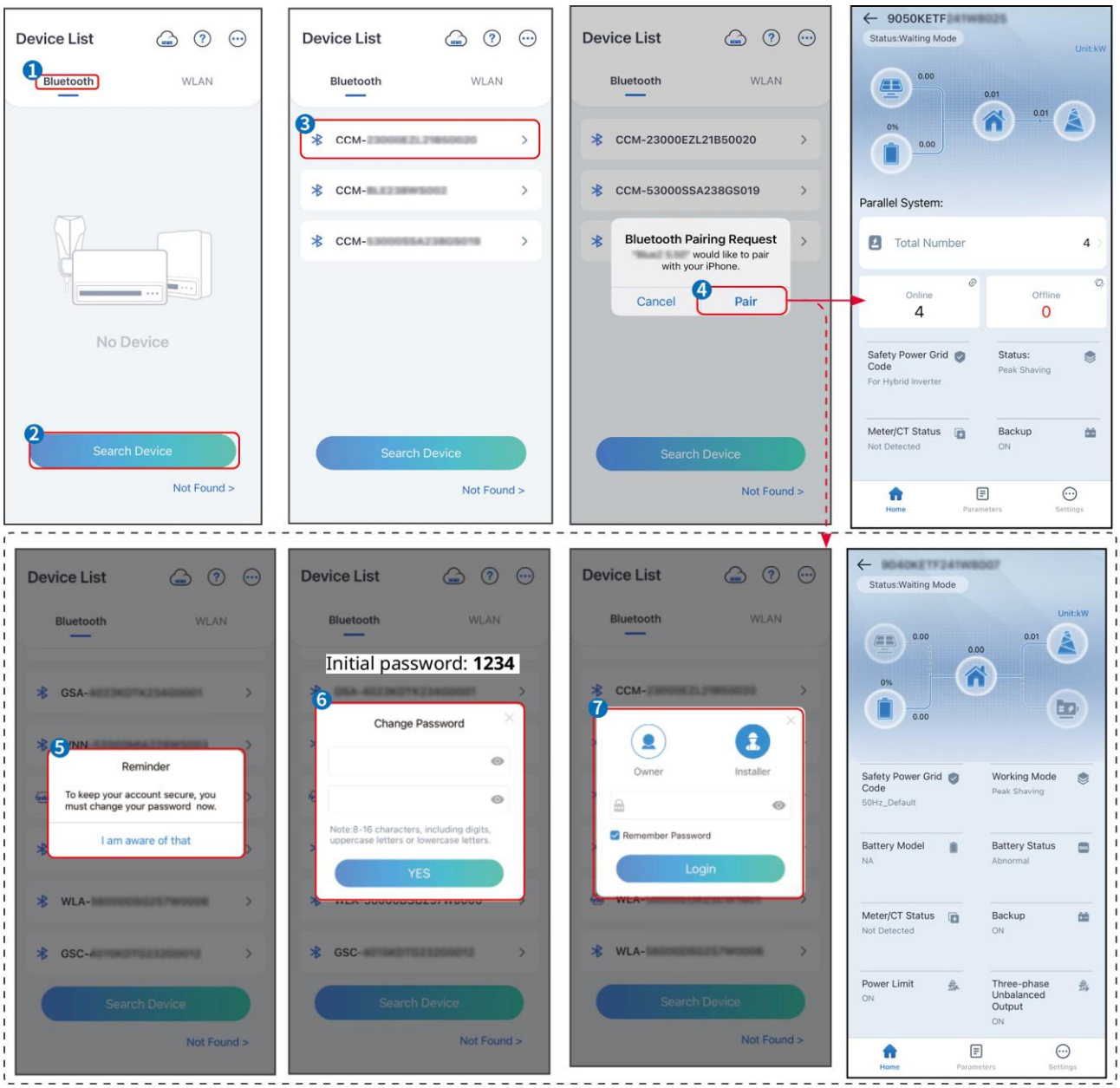

9.3 Quick Settings

NOTICE
● The parameters will be configured automatically after selecting the safety country/region, including overvoltage protection, undervoltage protection, overfrequency protection, underfrequency protection, voltage/frequency connection protection, cosφ curve, Q(U) curve, P(U) curve, FP curve, HVRT, LVRT, etc. ● The power generation efficiency of the inverter varies in different working modes. Please set according to the local actual power usage.

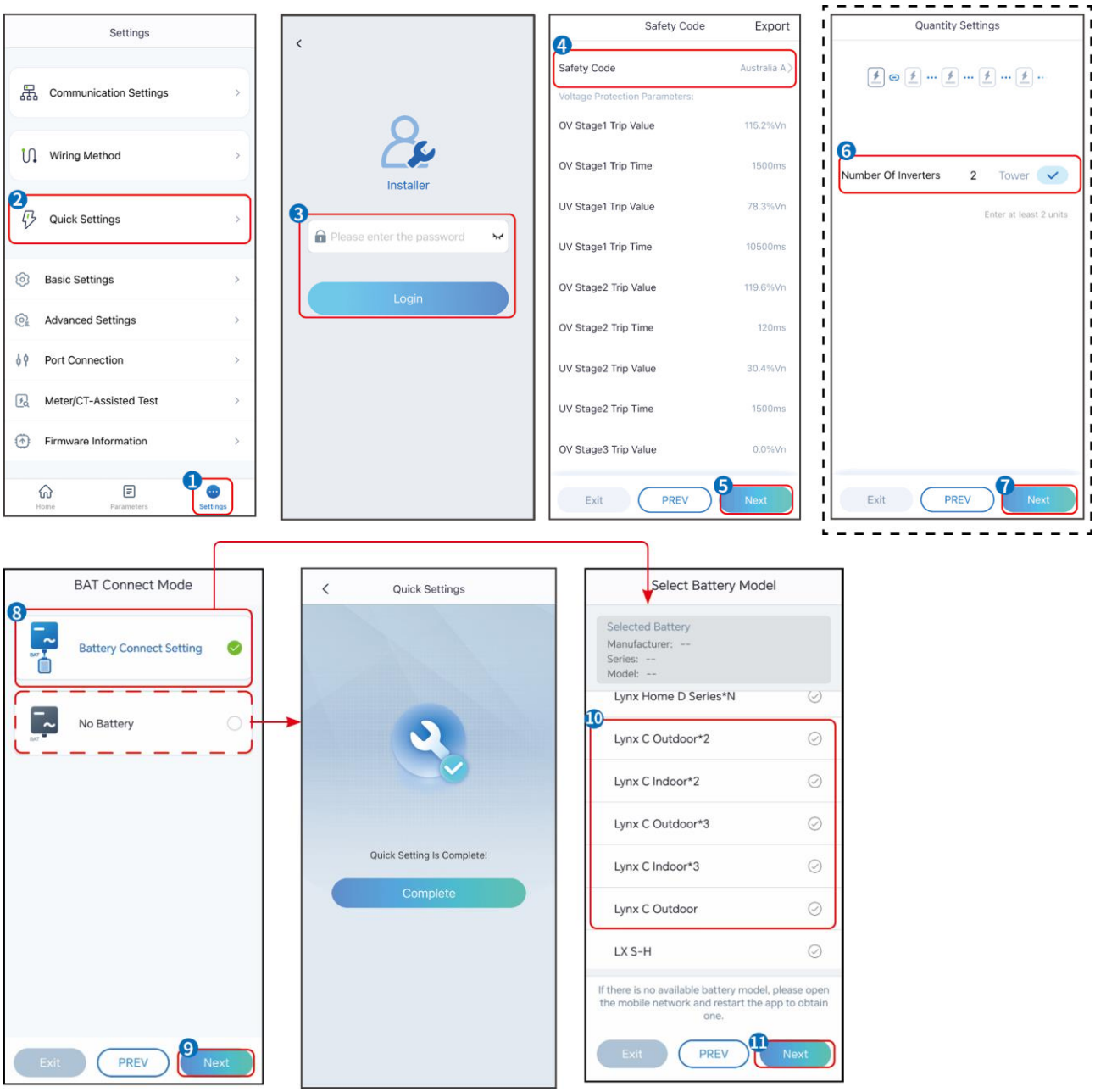

Parameters	Description
Safety Code	Select safety country accordingly.
BAT Connect Mode	Select the actual mode in which the battery is connected to the inverter. If there is no battery connected to the system, there is no need to configure the battery model and working mode, and the equipment will operate in the self-use mode by default.
Select Battery Model	Select the actual battery model.
Working Mode	Set the working mode when the device is running. Support: peakshaving mode, self-use mode.

When the self-use mode is selected, the interface will be displayed as follows. You need to enter the advanced mode to select the specific working mode and set the corresponding parameter values.

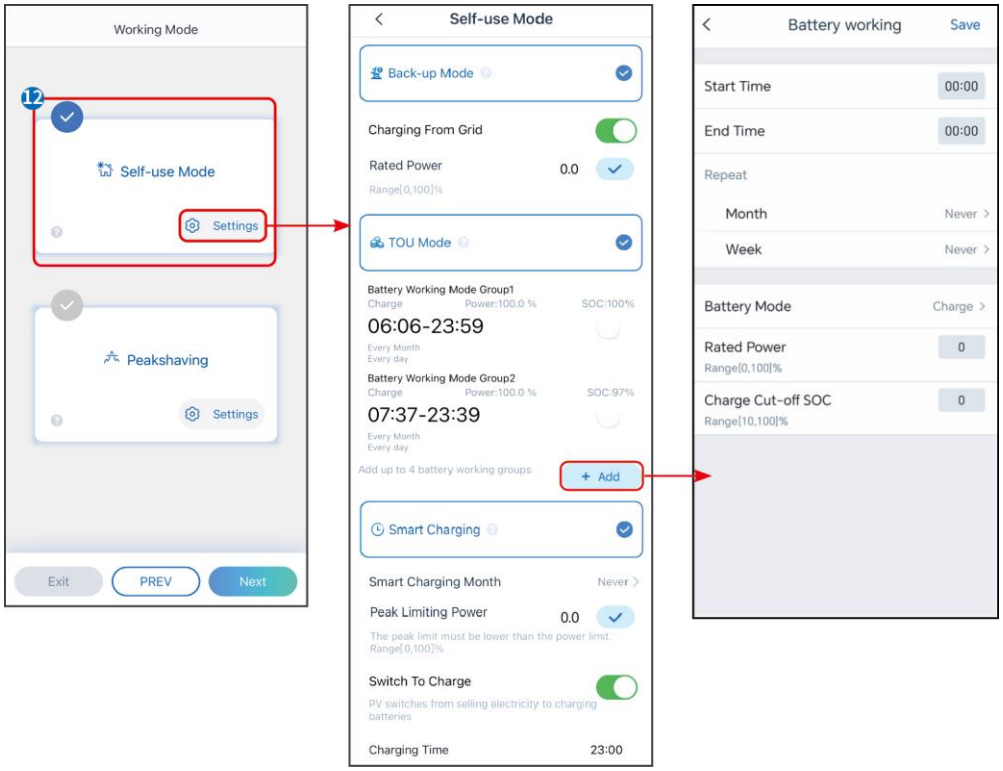

Parameters	Description
When the working mode is set to self-use mode, on the basis of this mode, back-up mode, TOU mode, and smart charging mode can be simultaneously selected, and the inverter will automatically select the corresponding mode to work. Working priority: **Back-up mode**> **TOU mode** > **Smart charging mode** > **Self use mode**.	
BACK-UP mode (It works only when the inverter is used with STS.)	
Purchase electricity from the grid for charging.	Enabling this function allows the system to purchase electricity from the power grid.
Rated Power	The percentage of the purchasing power to the rated power of the inverter.
TOU mode	
Start Time	Within the Start Time and End Time, the battery is charged or discharged according to the set Battery Mode as well as the Rated Power.
End Time	

Battery Mode	Set it to charge or discharge mode based on actual needs.
Rated Power	The percentage of the charging/discharging power to the rated power of the inverter.
Charge Cut-off SOC	The battery stop charging/discharging once the battery SOC reaches Charge Cut-off SOC.
Smart charging mode	
Smart Charging Month	Set the smart charging months. More than one month can be set.
Peak Limiting Power	Set the Peak Limiting Power in compliance with local laws and regulations. The Peak Limiting Power shall be lower than the output power limit specified by local requirements.
Switch to Charge	During charging time, the PV power will charge the battery.

The app interface is as following when Peakshaving mode is selected.

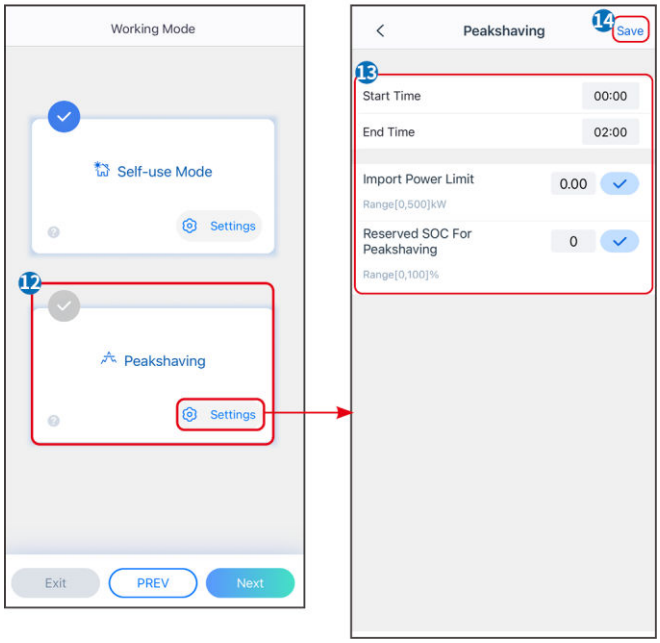

Parameters	Description
Peakshaving	
Start Time	The utility grid will charge the battery between Start Time and End Time if the load power consumption do not exceed the power quota.
End Time	

	Otherwise, only PV power can be used to charge the battery.
Import Power Limit	Set the maximum power limit allowed to purchase from the grid. When the loads consume power exceed the sum of the power generated in the PV system and Import Power Limit, the excess power will be made up by the battery.
Reserved SOC For Peakshaving	In Peak Shaving mode, the battery SOC should be lower than Reserved SOC For Peakshaving. Once the battery SOC is higher than Reserved SOC For Peakshaving, the peak shaving mode fails.

Tap **Complete** to complete the settings, restart the equipment following the prompts.

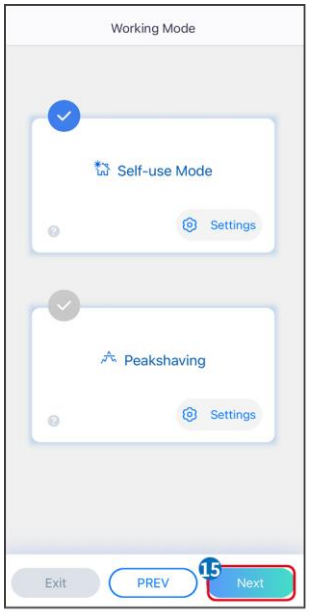

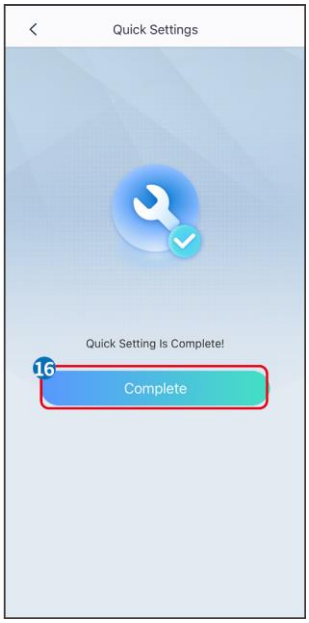

9.4 Communication Settings

Setting WLAN/LAN

NOTICE
The communication configuration interface may vary depending on the type of smart dongle connected to the inverter. Please refer to the actual interface for accurate information.

Set privacy and security parameters

Type 1

Step 1 Tap **Home** > **Settings** > **Communication Setting** > **Privacy & Security** to set the parameters.

Step 2 Set new WiFi hotspot password of the smart dongle according to actual needs, and click Save to complete the setting.

Step 3 Open the WiFi settings on your phone and use the new password to connect to the WiFi signal of the inverter.

Type 2

Step 1 Tap **Home** > **Settings** > **Communication Setting** > **Privacy & Security** to set the parameters.

Step 2 Keep Bluetooth continuous on and enable WLAN control function according to actual needs.

Setting WLAN/LAN

Step 1 Tap **Home** > **Settings** > **Communication Settings** > **Network Settings** to set the parameters.

Step 2 Set the WLAN or LAN parameters based on actual situation.

No.	Name/Icon	Description
1	Network Name	Only for WLAN. Please select the corresponding network according to the actual situation and communicate the device with the router or switch.
2	Password	Only for WLAN. Enter the password for the network you have chosen.
3	DHCP	● Enable DHCP when the router is in dynamic IP mode. ● Disable DHCP when a switch is used or the router is in static IP mode.
4	IP Address	● Do not configure the parameters when DHCP is enabled. ● Configure the parameters according to the router or switch information when DHCP is disabled.
5	Subnet Mask	
6	Gateway address	
7	DNS Server	

9.5 Wiring Method Setting

⚠ WARNING
Do not set the Wiring Method if the inverter is installed for the first time and only one inverter is applied.

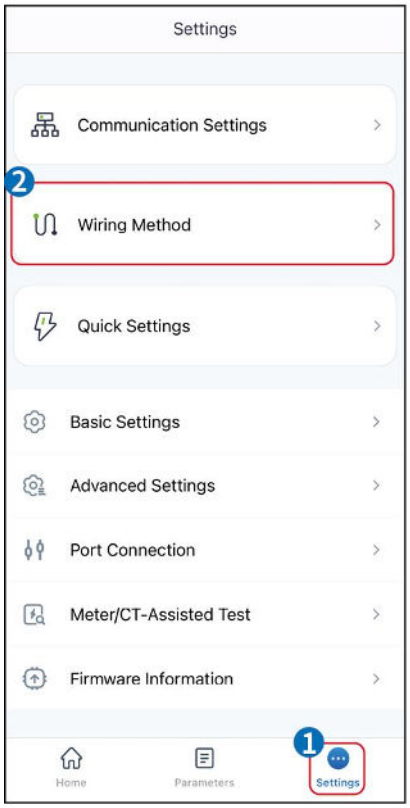

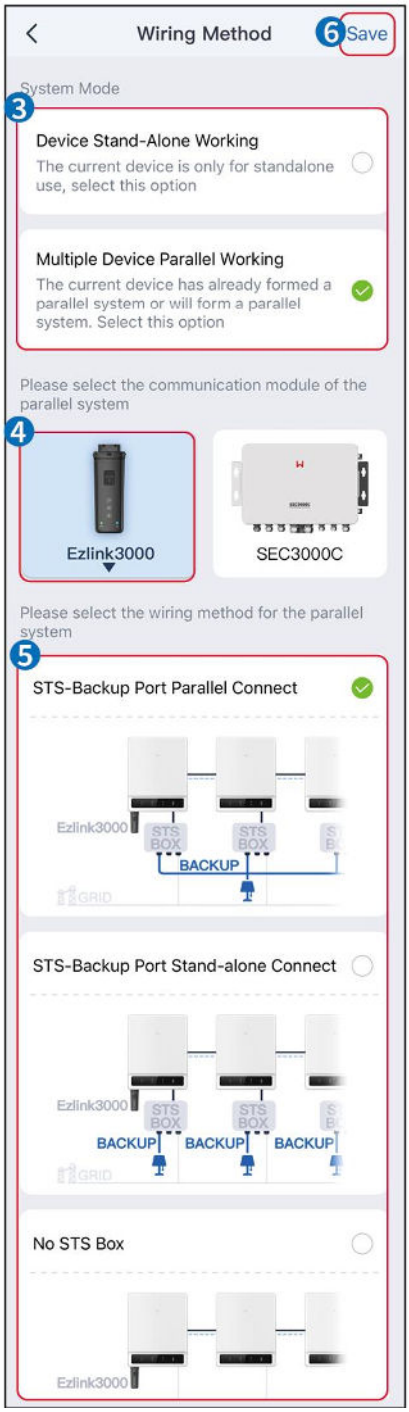

9.6 Setting the Basic Information

9.6.1 Setting Shadow Scan, SPD and Auto Test

Step 1 Tap **Home> Settings > Basic Settings** to set the parameters.

Step 2 Set the functions based on actual needs.

Shadow Scan, SPD and Auto Test

No.	Parameters	Description
1	Shadow Scan	Enable Shadow Scan when the PV panels are severely shadowed to optimize the power generation efficiency.
2	SPD	After enabling **SPD**, when the SPD module is abnormal, there will be SPD module abnormal alarm prompt.
3	Auto Test	Enable AUTO TEST to set auto test for grid tying in compliance with local grid standards and requirements.

9.6.2 Setting the Backup Function

This function can only be set when the inverter is used with STS.

After enabling Backup, the battery will power the load connected to the backup port of the inverter to ensure Uninterrupted Power Supply when the power grid fails.

No.	Parameters	Description
1	UPS Mode - Full Wave Detection	Check whether the utility grid voltage is too high or too low.
2	UPS Mode - Half Wave Detection	Check whether the utility grid voltage is too low.
3	EPS Mode - Supports	Stop detecting utility grid voltage.

	LVRT	
4	First Cold Start (Off grid)	Take effect once. In off-grid mode, enable First Cold Start (Off-grid) to output backup supply with battery or PV.
5	Cold Start Holding	Take effect multiple times. In off-grid mode, enable First Cold Start (Off-grid) to output backup supply with battery or PV.
6	Clear Overload History	Once the power of loads connected to the inverter BACK-UP ports exceeds the rated load power, the inverter will restart and detect the power again. The inverter will perform restart and detection several times until the overloading problem is solved. Tap Clear Overload History to reset the restart time interval after the power of the loads connected to the BACK-UP ports meets the requirements. The inverter will restart immediately

9.7 Setting Advanced Parameters

9.7.1 Setting AFCI

AFCI (Optional)

Reason to occur electric arcs

- Damaged connectors in PV or battery system.
- Wrong connected or broken cables.
- Aging of connectors and cables.

Methods to detect electric arcs:

- The inverter has an integrated AFCI function satisfies IEC63027.
- When the inverter detects an electric arc, users can find the time of the fault and the detailed phenomenon through SolarGo App.
- The inverter will shutdown for protection until the AFCI alarms are cleared. After clearing the alarms, the inverter can automatically reconnect to the grid.
    - Automatic reconnection: The alarm can be cleared automatically in 5 minutes if the inverter triggers a fault for less than 5 times within 24 hours.
    - Manual reconnection: The inverter will shutdown for protection after the 5th electric arc fault within 24 hours. The inverter cannot work normally until the fault is solved.

AFCI is disabled by default, enable it through SolarGo app if needed.

Model	Label	Description
GW40K-ET-10	F-I-AFPE-1-4/2-2	F: Full coverage I: Integrated AFPE: Detection and interruption capability provided 1: 1 monitored string per input port 4/2: 4/2 input ports per channel 2: 2 monitored channels
GW50K-ET-10	F-I-AFPE-1-4/4-2	F: Full coverage I: Integrated AFPE: Detection and interruption capability provided 1: 1 monitored string per input port 4/4: 4/4 input ports per channel 2: 2 monitored channels

Step 1 Tap **Home** > **Settings** > **Advanced Settings** > **AFCI** to set the parameters.

Step 2 Set the parameters based on actual needs. Tap '√' or Save to save the settings. The parameters are set successfully.

Parameters	Description
AFCI Test	Enable or disable AFCI accordingly.
AFCI Test Status	The test status, like Not Self-checking, self-check succeeded, etc.
Clear AFCI Alarm	Clear ARC Faulty alarm records.
Self-check	Tap to check whether the AFCI function works normally.

9.7.2 Setting PV Connect Mode

Step 1 Tap **Home** > **Settings** > **Advanced Settings** > **PV Connect Mode** to set the parameters.

Step 2 Select the actual mode in which the PV is connected to the inverter.

Parameters	Description

Stand-alone Connect	The PV strings are connected to the MPPT terminals one by one.
Partial Parallel Connect	When a PV string is connected to multiple MPPT ports on the inverter side, there are also other PV modules connected to other MPPT ports on the inverter side.
Parallel Connect	The external PV string is connected to multi MPPT terminals of the inverter.

9.7.3 Setting Power Limit Parameters

When the output power of the inverter is set, it may cause a derating in the output power of the inverter.

9.6.3.1 Power Limit Setting (For countries/regions except Australia)

Step 1 Tap **Home** > **Settings** > **Advanced Settings** > **Power Limit Setting** to set the parameters.

Step 2 Enable or disable the power limit function based on actual needs.

Step 3 After enabling the power limit function, enter the parameters and tap √. The parameters are set successfully.

No.	Parameters	Description
1	Power Limit	Enable **Power Limit** when power limiting is required by local grid standards and requirements.
2	Export Power	Set the value based on the actual maximum power feed into the utility grid.
3	External CT Ratio	Set the ratio of the primary current to the secondary current of the external CT.

9.7.3.2 Power Limit Setting (Only for Australia)

Step 1 Tap **Home** > **Settings** > **Advanced Settings** > **Power Limit Setting** to set the parameters.

Step 2 Enable or disable the power limit function based on actual needs.

Step 3 After enabling the power limit function, enter the parameters and tap √. The

parameters are set successfully.

No.	Parameters	Description
1	Soft Limit	Enable Soft Limit when power limiting is required by local grid standards and requirements.
2	Power Limit	Set the value based on the actual maximum power feed into the utility grid.
3	Hard Limit	After enabling this function, the inverter and the utility grid will automatically disconnect when the power feeds into the grid exceeds the required limit.
4	External CT Ratio	Set the ratio of the primary current to the secondary current of the external CT.

9.7.4 Setting the Battery Parameters

Step 1 Tap **Home** > **Settings** > > **Battery Function** to set the parameters.

Step 2 Enter the parameters and tap √. The parameters are set successfully.

Description	
Limit protection	
SOC Protection	After enabling the function, when the battery capacity is lower than the set value of Depth of Discharge (on-grid) or Depth of Discharge (off-grid). The protection function can be activated for the battery to stop discharging.
Depth Of Discharge (On-Grid)	Indicates the depth of discharge of the battery when the inverter is off-grid.
Depth of Discharge (Off-Grid)	The inverter can only use the BACK-UP function when working with STS. Indicates the depth of discharge of the battery when the inverter is off-grid.
Backup SOC Holding	The inverter can only use the BACK-UP function when working with STS. After the function is enabled, when the power grid is normal and the battery discharges to the preset SOC protection value, the battery level can be maintained without further decline, and the remaining power will

	be used to supply power to the load during power outages in the grid. If the photovoltaic power is not sufficient or there is no photovoltaic, power can be purchased from the power grid to charge the battery to maintain the reserved SOC.
Immediate Charging Enable to charge the battery by the grid immediately. Take effect once. Enable or Disable based on actual needs.	
SOC For Stopping Charging	Stop charging the battery once the battery SOC reaches SOC For Stopping Charging.
Immediate Charging Power	Indicates the percentage of the charging power to the inverter rated power when enabling Immediate Charging. For example, setting the Immediate Charging Power of a 50kW inverter to 60% means the charging power of the inverter is 10kW*60%=30kW.

9.7.5 Setting Unbalanced Voltage Output Function

Step 1 Tap **Home** > **Settings** > **Advanced Settings** > **Unbalanced Voltage Output** to set the parameters.

Step 2 Enable or disable the unbalanced voltage output function based on actual needs.

Step 3 Enter the parameters and tap √. The parameters are set successfully.

Parameters	Description
Unbalanced Voltage Output	After the function is enabled, the inverter will perform some power load reduction and power distribution according to the voltage value of each phase grid to ensure the maximum utilization of power and prevent voltage rise as much as possible.
Voltage Threshold	The voltage value that triggers the unbalanced voltage output function to take effect.

9.8 Setting Load Control

The inverter can only use the BACK-UP function when working with STS. The inverter supports load control for the GENETOR port or the BACK UP LOAD port.

GENERATOR port load control

Step 1 Tap **Home > Settings > Port Connection > Load Connection > Load Control** to set the parameters.

Step 2 Enter the parameters and tap √. The parameters are set successfully.

BACKUP LOAD port load control

Step 1 Tap **Home > Settings > Port Connection > Generator Connection > Backup Load Control** to set the parameters.

Step 2 Enter the parameters and tap √. The parameters are set successfully.

Dry Contact Mode: when the switch is ON, the loads will be powered; when the switch is OFF, the power will be cut off. Turn the switch on or off based on actual needs.

Time Mode: set the time to enable the load, and the load will be powered automatically within the setting time period. Select standard mode or intelligent mode.

No.	Parameters	Description
1	Standard	The loads will be powered within the setting time period.
2	Intelligent	Once the excess energy of the photovoltaic exceeds the load nominal power within the time period, the loads will be powered.
3	Start Time	The time mode will be on between the Start Time and End Time.
4	End Time	
5	Repeat	The repeat days.
6	Load Consumption Time	The shortest load working time after the loads been powered. The time is set to prevent the loads be turned on and off frequently when the PV power fluctuates greatly. Only for Intelligent mode.
7	Load Rated Power	The loads will be powered when the excess energy of the photovoltaic exceeds the nominal power of load. Only for Intelligent mode.

SOC mode: STS has a built-in load control port that can control whether to supply power to the load.

In off grid mode, if overload or triggering of battery SOC protection function is detected on the ACK-UP terminal or the GENETOR terminal, power supply to the load connected to the port can be stopped.

9.9 Setting Generator Control Function

Only when the inverter works with STS, it supports connecting and controlling the generator.

The inverter supports the connection of generator control signals and can control the start and stop of the generator connected to the Generator port of the STS device. The generator control function mode is as follows:

- **Not installed Generator:** Select this option when the generator is not installed in the energy storage system.
- **Manual control of generator (Does not support dry node connection)**: The start and stop of the generator shall be controlled manually, and the inverter cannot control the start and stop of the generator.
- **Automatic control generator (Supports dry node connection**): When the generator has a dry contact control port and is connected to the inverter, the generator control mode of the inverter needs to be set to the SolarGo app **Switch Control Mode** OR **Automatic Control Mode**.
  - **Switch Control Mode**: When the switch status is open, the generator works; the generator can automatically stop working after the set operation time.
  - **Automatic Control Mode**: the generator is prohibited to work in the set forbidden working time period, and the generator is allowed to work in the operation time period.

The generator control function is turned off by default, if required, turn it on via the SolarGo App and set the generator control information and operating parameters related to charging the battery by the generator.

Step 1 Tap **Home** > **Settings** > **Port Connection** > **Generator Control>** to set the parameters.

Step 2 Enter the parameters and tap √. The parameters are set successfully.

Parameters	Description
Switch Control Mode	
Generator Dry Node Switch	After it is enabled, the generator starts to run.
Running time	The generator continues to run for a period of time, after which the generator stops running.

Automatic Control Mode	
No working time	Set a prohibited working time for generator.
Running time	The continuous running time of the generator after starting, and the generator stops running after reaching the time. If the starting and running time of the generator includes a Prohibited Working Hours, the generator will stop running during this time period; After the Prohibited Working Hours, the generator will resume operation and timing.

Parameters	Description
Generator Information Settings	
Rated Power	Set the rated power generation of the generator
Upper Voltage	Set the rated voltage generation range of the generator
Lower Voltage	
Upper frequency limit	Set the rated power generation frequency range of the generator
Lower Frequency	
Preheating time	Set the operating time before the generator is allowed to connect to the inverter for power generation.
Parameter settings for the generator to charge the battery	
Switch	Choose whether to use a generator to generate electricity and charge the battery.
Maximum charging power (‰)	Charging power to charge the battery with a generator.
Start Charging SOC	When the SOC of the battery is lower than the set value, the generator will charge the battery.
Stop Charging SOC	When the SOC of the battery is higher than the set value, the generator will stop charging the battery.

9.10 Setting Safety Parameters

9.10.1 Setting Basic Safety Parameters

NOTICE

The grid standards of some countries/regions require that inverters shall set functions to meet local requirements.

Three-phase Unbalanced Output

The AC end of the inverter supports three-phase unbalanced output power, and the maximum output power of each phase of different models is shown in the table below:

Model	Max. Output Power per Phase (W)
GW40K-ET-10	14.66kW
GW50K-ET-10	18.33kW

Step 1 Tap **Home** > **Settings** > **Advanced Settings** to set the parameters.

No.	Parameters	Description
1	DRED/Remote Shutdown/RCR	Enable DRED/Remote Shutdown/RCR before connecting the third party DRED, remote shutdown, or RCR device to comply with local laws and regulations.
2	Three-phase Unbalanced Output	Enable Three-phase Unbalanced Output when the utility grid company adopts phase separate billing.
3	Backup N and PE Relay Switch	The inverter can only use the BACK-UP function when working with STS. To comply with local laws and regulations, ensure that the relay inside the back-up port remains closed and the N and PE wires are connected when the inverter is working off-grid.

9.10.2 Setting Customized Safety Parameters

NOTICE
Set the custom safety parameters in compliance with local requirements. Do not change the parameters without the prior consent of the grid company.

9.10.2.1 Setting the Active Power Mode

Setting the P(F) Curve

Step 1 Tap **Home > Settings > Advanced Settings > Safety Parameter Settings > Active Power Mode** to set the parameters.

Step 2 Set the parameters based on actual needs.

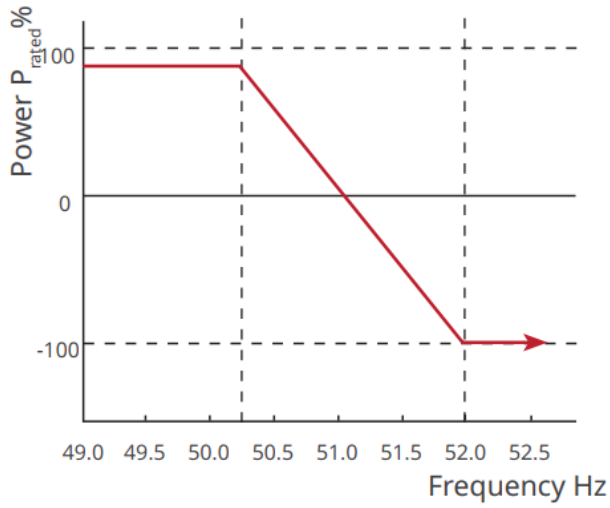

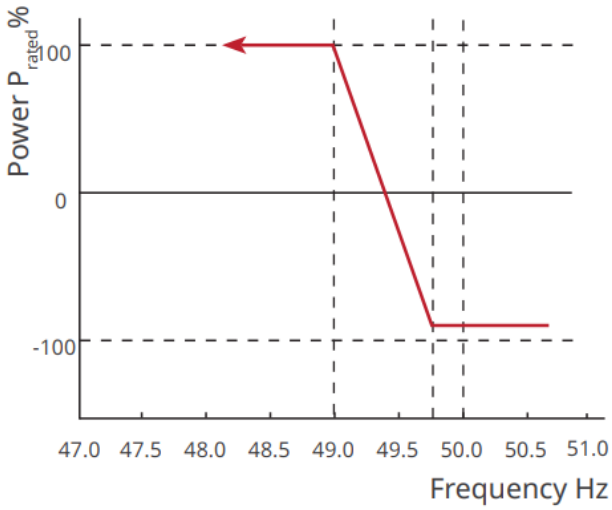

Setting the P(U) Curve

Step 1 Tap **Home > Settings > Advanced Settings > Safety Parameter Settings > Active Power Mode** to set the parameters.

Step 2 Enter the parameters. The inverter will adjust the active output power to the apparent power ratio in real-time according to the actual grid voltage to the rated voltage ratio.

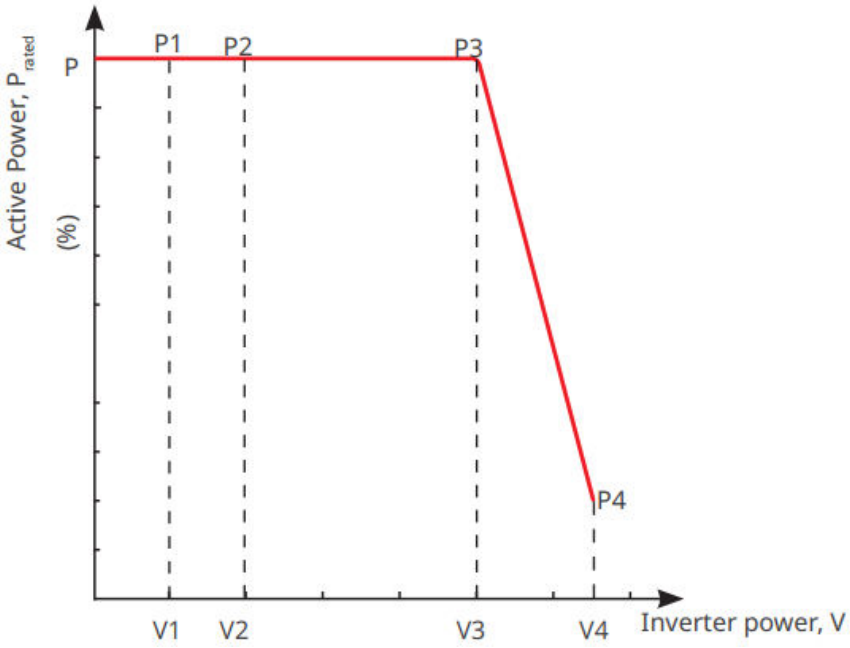

9.10.2.2 Setting the Reactive Power Mode

Setting the Fix PF

Step 1 Tap **Home** > **Settings** > **Advanced Settings** > **Safety Parameter Settings** > **Reactive Power Mode** to set the parameters.

Step 2 Set the parameter based on actual needs. The power factor remains fixed during the inverter working process.

No.	Parameters	Description
1	Fix PF	Enable Fix PF when it is required by local grid standards and requirements.
2	Under-excited	Set the power factor as lagging or leading based on actual needs and local grid standards and requirements.
3	Over-excited	
4	Power Factor	Set the Power Factor based on actual needs.

Setting the Fix Q

Step 1 Tap **Home** > **Settings** > **Advanced Settings** > **Safety Parameter Settings** > **Reactive Power Mode** to set the parameters.

Step 2 Set the parameter based on actual needs. The output reactive power remains fixed during the inverter working process.

No.	Parameters	Description
1	Fix Q	Enable Fix Q when it is required by local grid standards and requirements.
2	Under-excited	Set the reactive power as inductive or capacitive reactive power based on actual needs and local grid standards and requirements.
3	Over-excited	
4	Power Factor	The percentage of reactive output power to apparent power.

Setting the Q(U) Curve

Step 1 Tap **Home** > **Settings** > **Advanced Settings** > **Safety Parameter Settings** > **Reactive Power Mode** to set the parameters.

Step 2 Enter the parameters. The inverter will adjust the reactive power to the apparent power ratio in real-time according to the actual grid voltage to the rated voltage ratio.

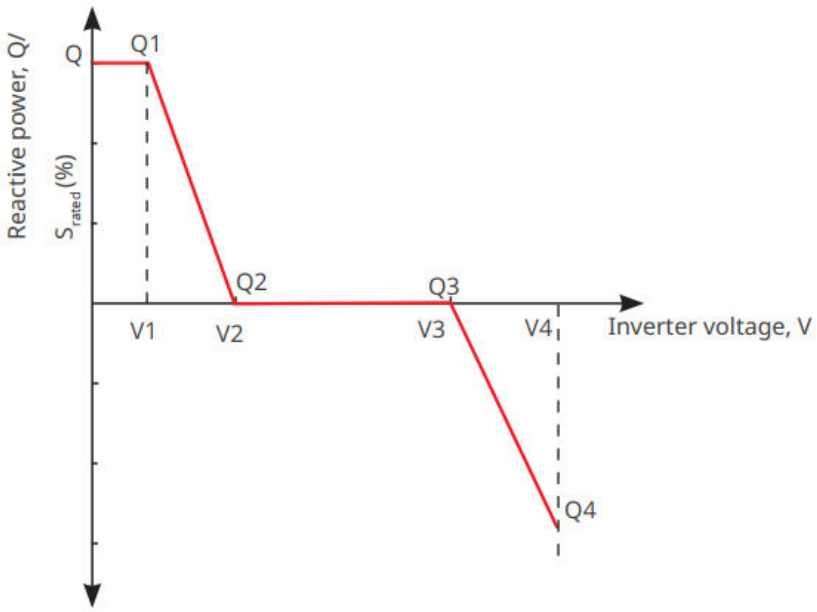

Setting the Cosφ Curve

Step 1 Tap **Home** > **Settings** > **Advanced Settings** > **Safety Parameter Settings** > **Reactive Power Mode** to set the parameters.

Step 2 Enter the parameters. The inverter will adjust the active output power to the apparent power ratio in real-time according to the actual grid voltage to the rated voltage ratio.

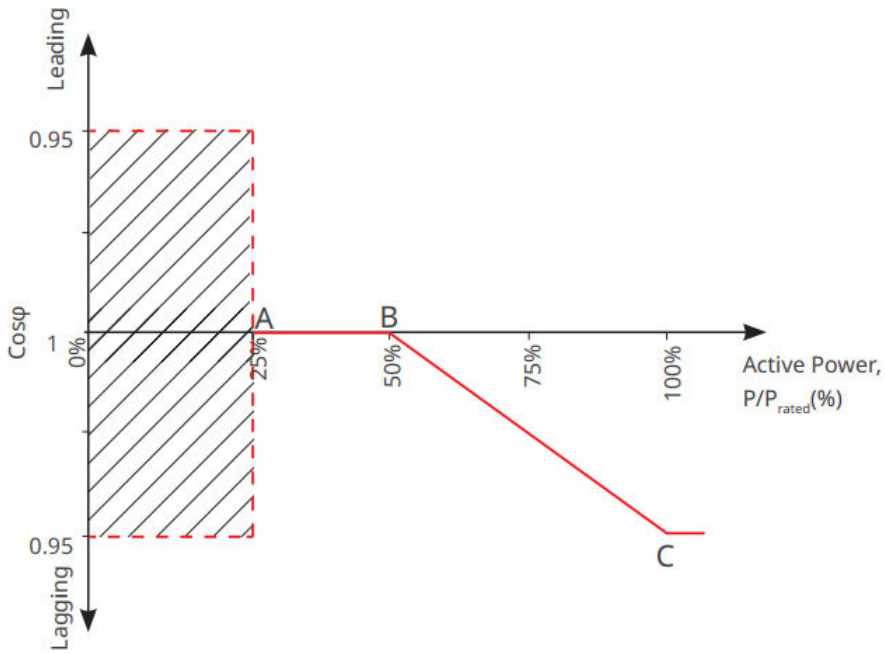

9.10.2.3 Setting Utility Grid Protection Parameters

Step 1 Tap **Home** > **Settings** > **Advanced Settings** > **Safety Parameter Settings** > **Protection Parameters** to set the parameters.

Step 2 Set the parameters based on actual needs.

No.	Parameters	Description
Voltage Protection Parameters		
1	OV Stage n Trip Value	Set the grid overvoltage protection threshold value, n = 1, 2, 3.
2	OV Stage n Trip Time	Set the grid overvoltage protection tripping time, n = 1, 2, 3.
3	UV Stage n Trip Value	Set the grid undervoltage protection threshold value, n= 1, 2, 3.
4	UV Stage n Trip Time	Set the grid undervoltage protection tripping time, n = 1, 2, 3.
5	Grid 10min Overvoltage	Set the 10min overvoltage protection threshold value.
Frequency Protection Parameters		
6	OF Stage n Trip Value	Set the grid overfrequency protection threshold value, n = 1, 2.
7	OF Stage n Trip Time	Set the grid overfrequency protection tripping time, n = 1, 2.
8	UF Stage n Trip Value	Set the grid underfrequency protection threshold value, n = 1, 2.
9	UF Stage n Trip Time	Set the grid underfrequency protection tripping time, n = 1, 2.

9.10.2.4 Setting Connection Parameters

Step 1 Tap **Home** > **Settings** > **Advanced Settings** > **Safety Parameter Settings** > **Connection Parameters** to set the parameters.

Step 2 Set the parameters based on actual needs.

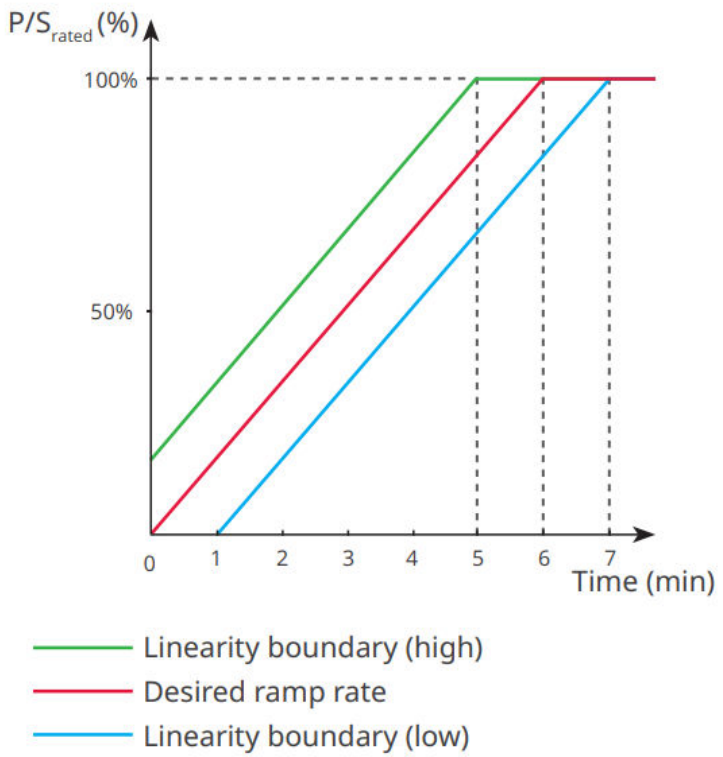

9.10.2.5 Setting Voltage Ride Through Parameters

Step 1 Tap **Home** > **Settings** > **Advanced Settings** > **Safety Parameter Settings** > **Voltage Ride Through** to set the parameters.

Step 2 Set the parameters based on actual needs.

No.	Parameters	Description
LVRT		
1	UV1-7 Voltage	The voltage values and corresponding duration of undervoltage at each stage of the power grid, during which the inverter can remain connected to the grid.
2	UV1-7 Time	
3	Enter Into LVRT Threshold	The inverter will not be disconnected from the utility grid and enter Into LVRT Threshold when the grid voltage is between Enter Into LVRT Threshold and Exit LVRT Endpoint.
4	Exit LVRT Endpoint	
5	Gradient K1	This setting is not supported by this series inverter. Voltage change slope.
6	Zero Current Mode	After the function is enabled, when the inverter is in LVRT Threshold mode, there is no current output.

7	Entry Threshold	When the grid voltage is lower than this value, the inverter enters zero current mode.
HVRT		
8	OV1-7 Voltage	The voltage values and corresponding duration of undervoltage at each stage of the power grid, during which the inverter can remain connected to the grid.
9	OV1-7 Time	
10	Enter High Crossing Threshold	The inverter will not be disconnected from the utility grid and enter Into LVRT Threshold when the grid voltage is between Enter Into LVRT Threshold and Exit LVRT Endpoint.
11	Exit High Crossing Threshold	
12	Slope K2	This setting is not supported by this series inverter. Voltage change slope.
13	Zero Current Mode	After the function is enabled, when the inverter is in HVRT mode, there is no current output.
14	Entry Threshold	When the grid voltage is higher than this value, the inverter enters Zero Current Mode.
Current Distribution Mode		
15	Reactive Power Priority Mode	Inverter default and can only be **Reactive Power Priority Mode**.
16	Active Power Priority Mode	This mode is not supported by this series of inverters.
17	Constant Current Mode	This mode is not supported by this series of inverters.
Reactive Power Recovery Mode After Crossing		
18	Disable	The inverter is default and can only be disabled.
19	Gradient Control	This mode is not supported by this series of inverters.
20	PT-1 Behavior	This mode is not supported by this series of inverters.

9.10.2.6 Setting Frequency Ride Through Parameters

No.	Parameters	Description
1	UF1-3 Frequency	Frequency values of underfrequency in different stage. When the grid frequency is lower than this frequency, the inverter can remain connected to the grid.
2	UF1-3 Time	Underfrequency protection time for different stage. When the grid frequency is lower than this frequency, the maximum time the inverter can remain connected to the grid.
3	OF1-3 Frequency	Frequency values of overfrequency in different stage. When the grid frequency is higher than this frequency, the inverter can remain connected to the grid.
4	OF1-3 Time	Overfrequency protection time for different stage. When the grid frequency is higher than this frequency, the maximum time the inverter can remain connected to the grid.

10 Monitoring Power Plant

10.1 SEMS Portal App Overview

SEMS Portal App is a monitoring platform. Commonly used functions are as follows:

1. Manage the organization or User information;
2. Add and monitor the power plant information;
3. Equipment maintenance.

Login Page of SEMS Portal App

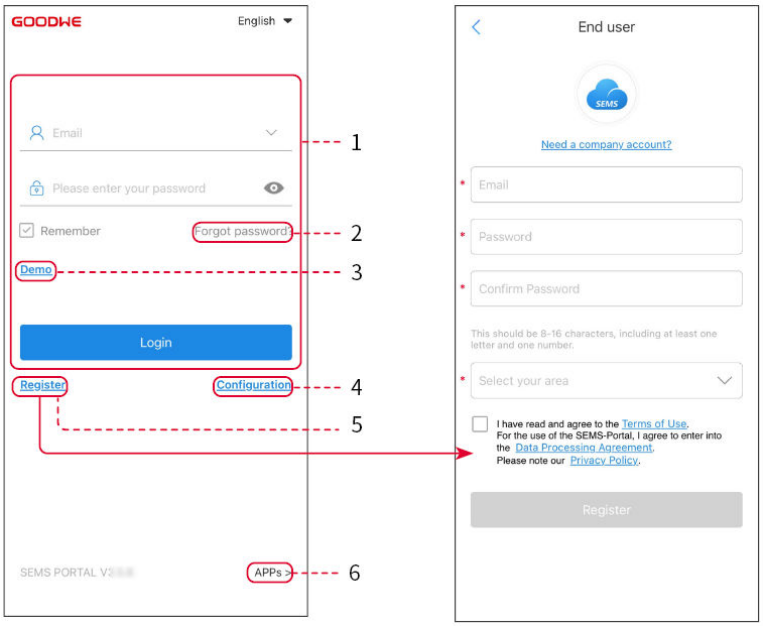

No.	Name	Description
1	Login Area	Enter the user name, password to login to the app.
2	Forget Password	Tap to reset the password by verifying the account.
3	Demo	Tap to enter the sample plant page. The sample page only displays contents with Visitor account, which is for reference only.
4	Configuration	Configure WiFi parameters to establish communication between the inverter and the server and realize remote monitoring and managing.

5	Register	Tap to register an end-user account. Contact the manufacturer or the company as prompted if you need a company account.
6	Demo	Tap to enter the sample plant page. The sample page only displays contents with Visitor account, which is for reference only.

Home Page of SEMS Portal App

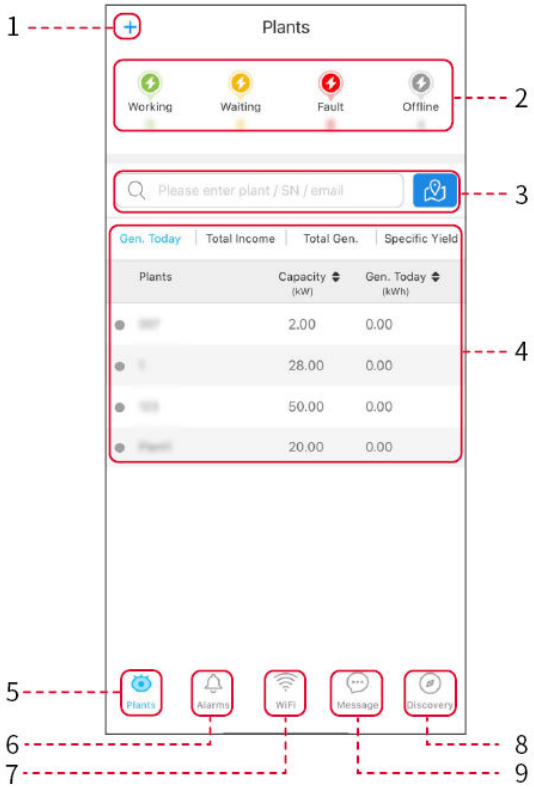

No.	Name	Description
1	+	Create a new power plant.
2	Plant status	The summary of the plants working information under the account.
3	Find the plant	Find the plant by entering the plant name, device SN, Email address, or map.
4	Generation statistics	The working information of a single plant. Tap the plant name to check the detailed information of the plant, such as plant name, location, power, capacity, generation today, total generation, etc.
5		Plant monitoring page.

	Plants	
6	Alarms	Check all alarms, happening alarms, and recovered alarms.
7	WiFi	Complete WiFi configurations when a Wi-Fi Kit dongle is used.
8	Message	Message Set and check system messages.
9	Discovery	Discovery To **Edit** the account, create My QR Code, set **Income Settings**, etc.
10		Fault. Used to view all faults, unresolved faults, and recovered faults.
11		Message Set and view system messages.
12		Mine. It is used to edit account information, generate my QR code, set power generation yield, set weather information, view platform service agreements, privacy statements, etc.

10.2 Managing the Plant or Devices

10.2.1 Creating Power Plant

Step 1 Enter the **Create Plant** page.

Step 2 Read the instructions and fill in the requested plant information based on actual situation. (* refers to the mandatory items)

Step 3 Follow the prompts to add devices and create the plant.

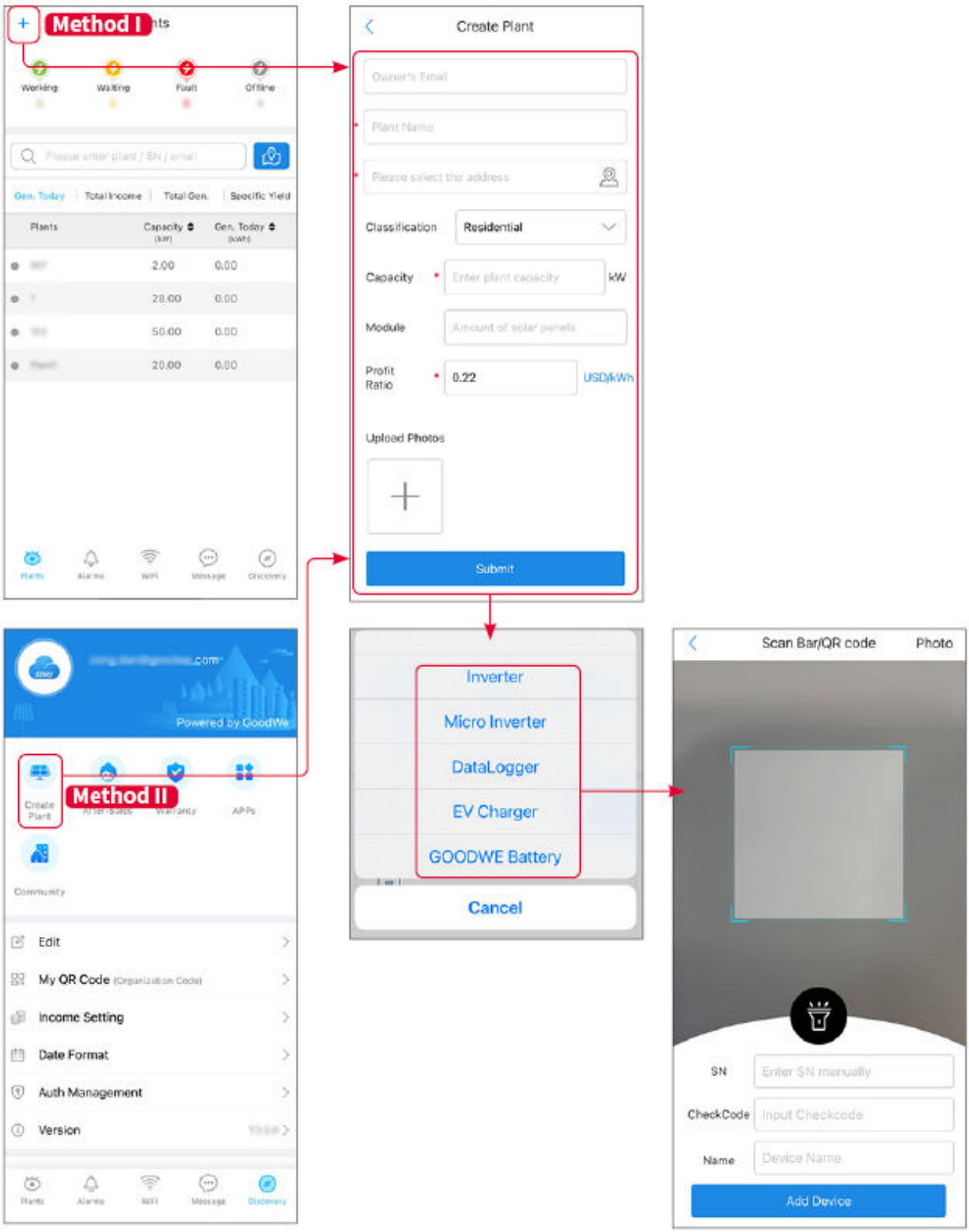

10.2.2 Managing the Plant

Step 1 Enter the power plant monitoring page and delete or modify the power plant information based on actual needs.

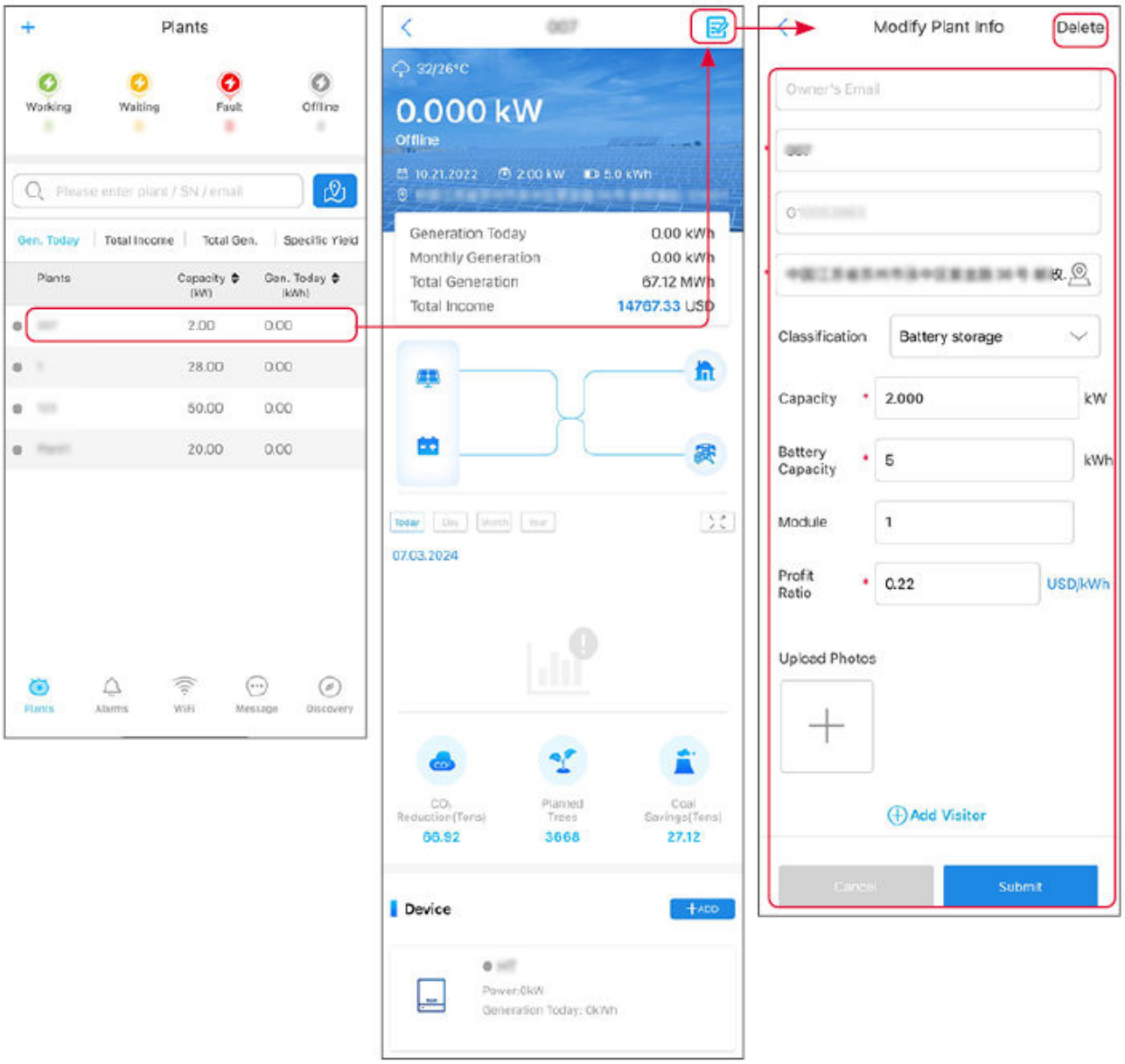

10.2.3 Managing the Devices

Step 1 Select the power plant and enter the detailed information page.

Step 2 Add, delete, or replace the devices based on actual needs.

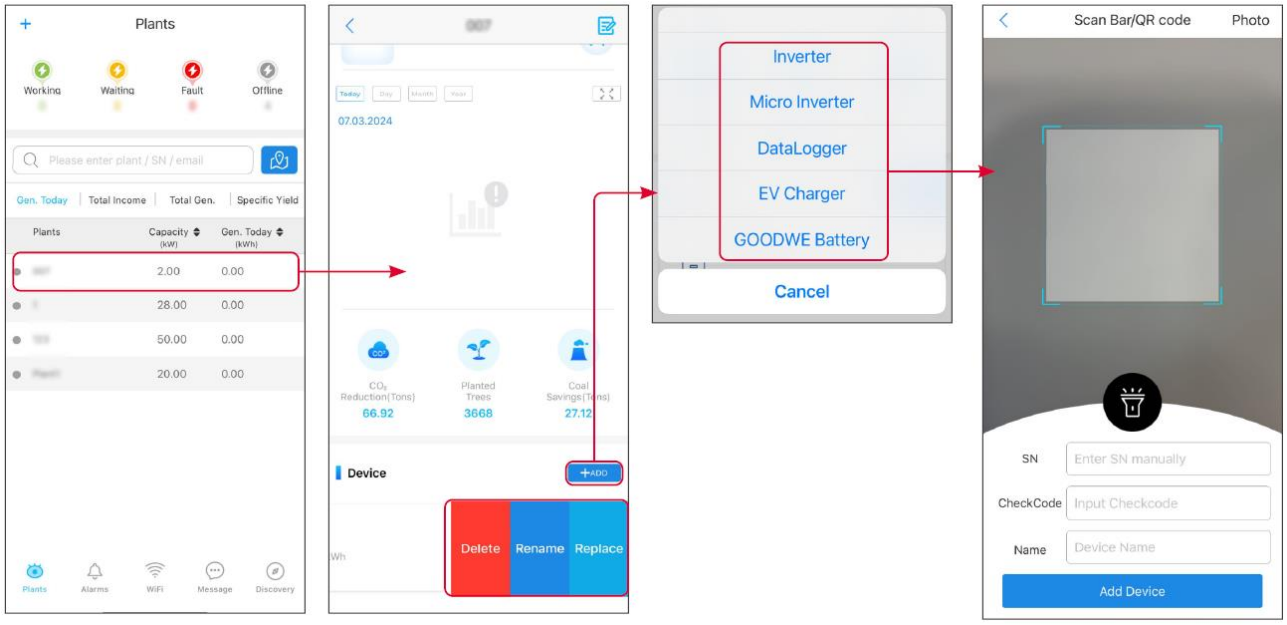

10.3 Monitoring Power Plant

10.3.1 Checking the Plant Information

Log in the SEMS Portal App with the account and password. The overall working situation of all power plants under this account will be displayed. Click Monitoring to enter the power plant monitoring interface to view all power plant information.

The displayed content of different interfaces of power plant equipment varies, please refer to the actual situation.

Step 1: (Optional) Search the plant name, inverter SN, or Email to find out the plant quickly. Or tap the map icon to search the plant.

Step 2 Tap the plant name in the plant list or the plant icon in the map to check detailed information about the plant.

Step 3 Check the plant information, power generation situation, device information, faults, etc.

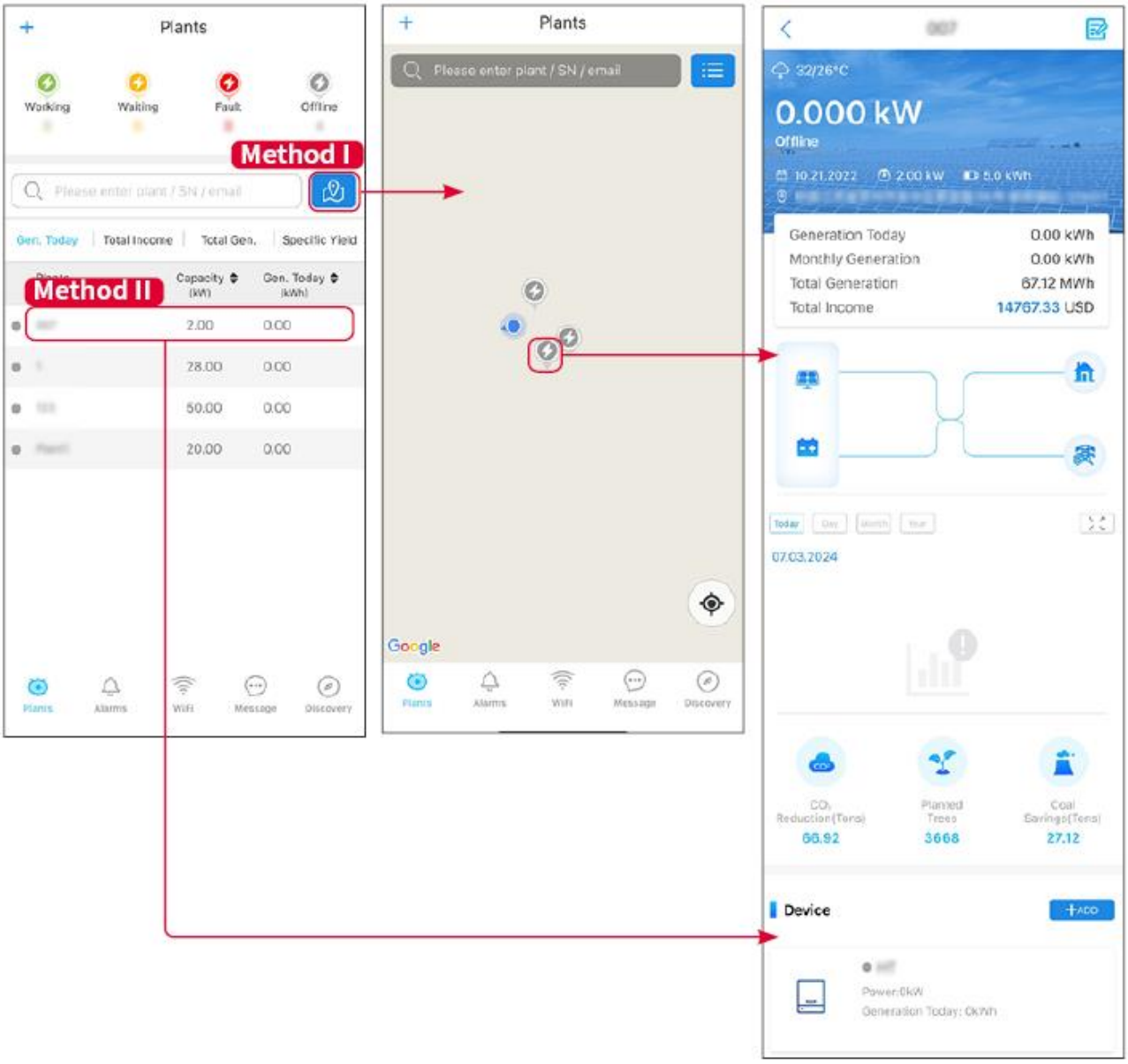

10.3.2 Viewing Alarm Information

Step 1 Tap Alarm tab and enter the Alarm Details page.

Step 2 (optional) Enter the plant name, inverter SN, or owner’ s Email address in the search bar to find out the plant which is alarming.

Step 3 Tap the alarm name to check the alarm details.

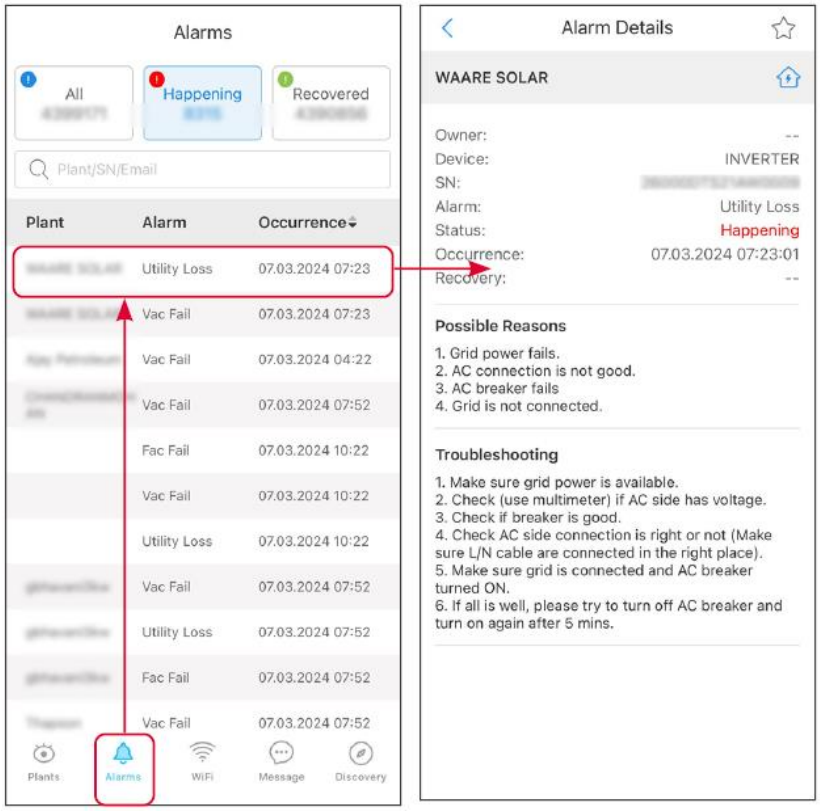
Alarms
All
Happening
Recovered
Plant/SN/Email
Plant
Alarm
Occurrence
Utility Loss 07.03.2024 07:23
Vac Fail 07.03.2024 07:23
Vac Fail 07.03.2024 04:22
Vac Fail 07.03.2024 07:52
Fac Fail 07.03.2024 10:22
Vac Fail 07.03.2024 10:22
Utility Loss 07.03.2024 10:22
Vac Fail 07.03.2024 07:52
Utility Loss 07.03.2024 07:52
Fac Fail 07.03.2024 07:52
Vac Fail 07.03.2024 07:52
Plants
Alarms
WiFi
Message
Discovery
Alarm Details
WAARE SOLAR
Owner: --
Device: INVERTER
SN:
Alarm: Utility Loss
Status: Happening
Occurrence: 07.03.2024 07:23:01
Recovery: --
Possible Reasons
1. Grid power fails.
2. AC connection is not good.
3. AC breaker fails
4. Grid is not connected.
Troubleshooting
1. Make sure grid power is available.
2. Check (use multimeter) if AC side has voltage.
3. Check if breaker is good.
4. Check AC side connection is right or not (Make sure L/N cable are connected in the right place).
5. Make sure grid is connected and AC breaker turned ON.
6. If all is well, please try to turn off AC breaker and turn on again after 5 mins.

11 Maintenance

11.1 Power OFF the System

DANGER

- Power off the equipment before operations and maintenance. Otherwise, the equipment may be damaged or electric shocks may occur.
- Delayed discharge. Wait until the components are discharged after power off.
- Strictly follow the power off requirements to avoid damaging the system
- The emergency power off of the energy storage system is only compatible with the GW100KWH-D-10 (Extension) battery system.
  - When the single inverter energy storage system malfunctions, please use the emergency stop switch on the GW100KWH-D-10 (Extension) battery system to quickly disconnect the power grid and stop charging and discharging the battery system.
  - When the energy storage system with multiple inverters malfunction, please use the emergency stop switch on the GW100KWH-D-10 (Extension) battery system connected to the master inverter to quickly disconnect the power grid and stop charging and discharging the battery system.

NOTICE

Install the circuit breaker between the inverter and the battery or between the two batteries in compliance with local laws and regulations.

11.1.1 Single inverter, on-grid, without BACK-UP function

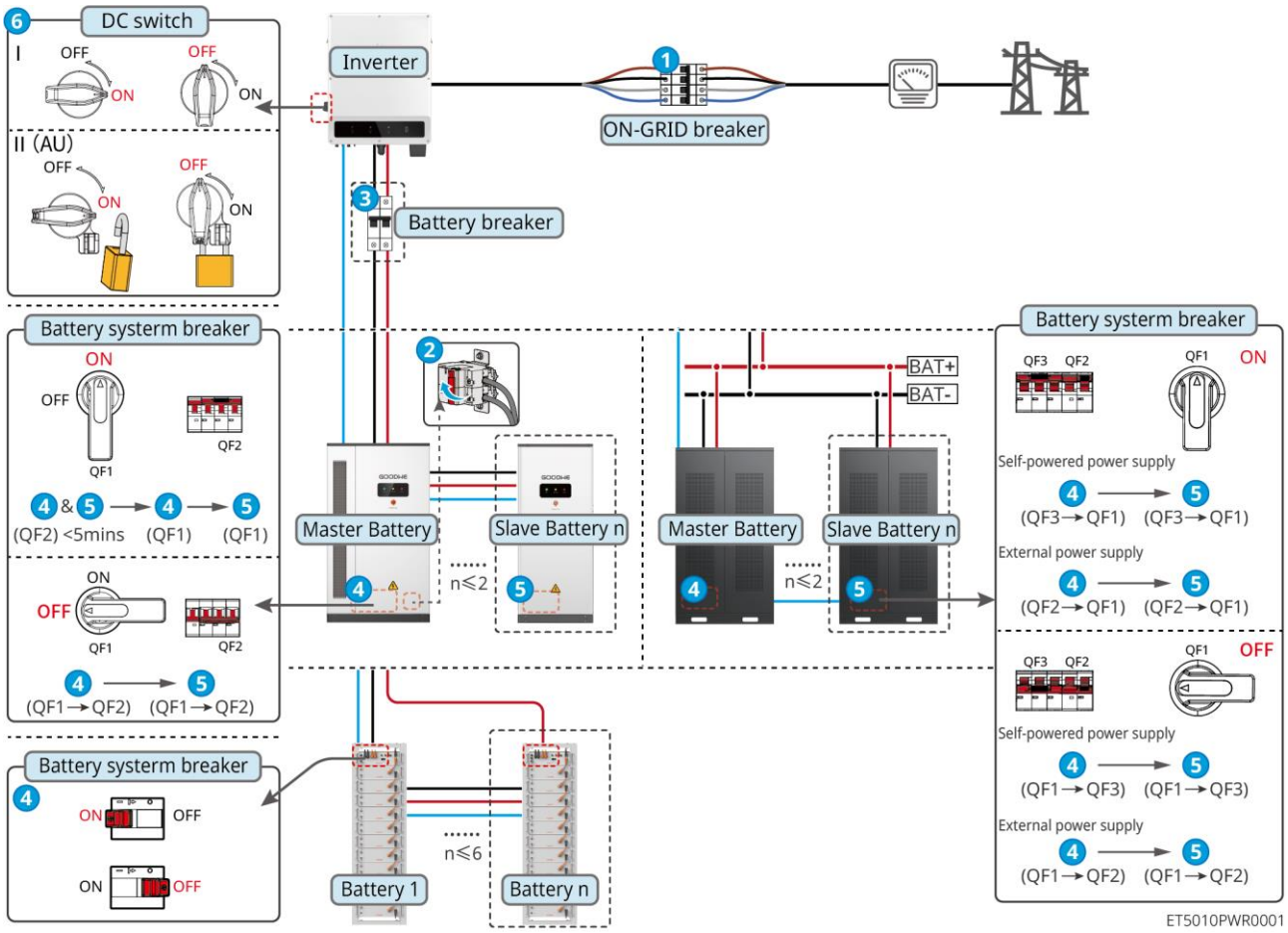

System power off: ❶ →❷ →❸ →❹ →❺ →❻

❸: Optional in compliance with local laws and regulations

❺: Step 5 does not apply to GW51.2-BAT-I-G10 & GW56.3-BAT-I-G10

11.1.2 Single inverter, on-grid/off-grid, with BACK-UP function

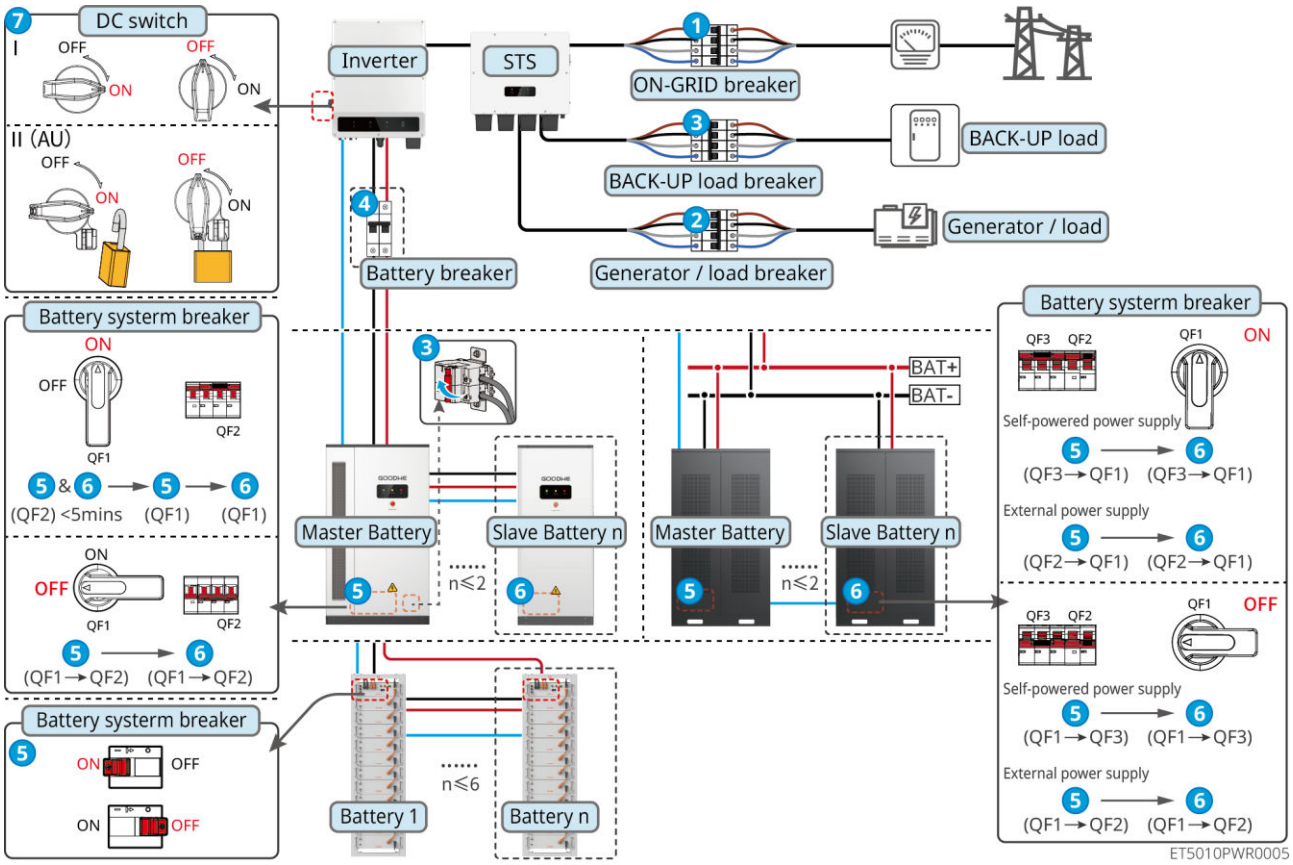

System power off: ❶ →❷ →❸ →❹ →❺ →❻ →❼

❹: Optional in compliance with local laws and regulations

❻: Step 6 does not apply to GW51.2-BAT-I-G10 & GW56.3-BAT-I-G10

11.1.3 Multiple inverters in parallel, on-grid, without BACK-UP function

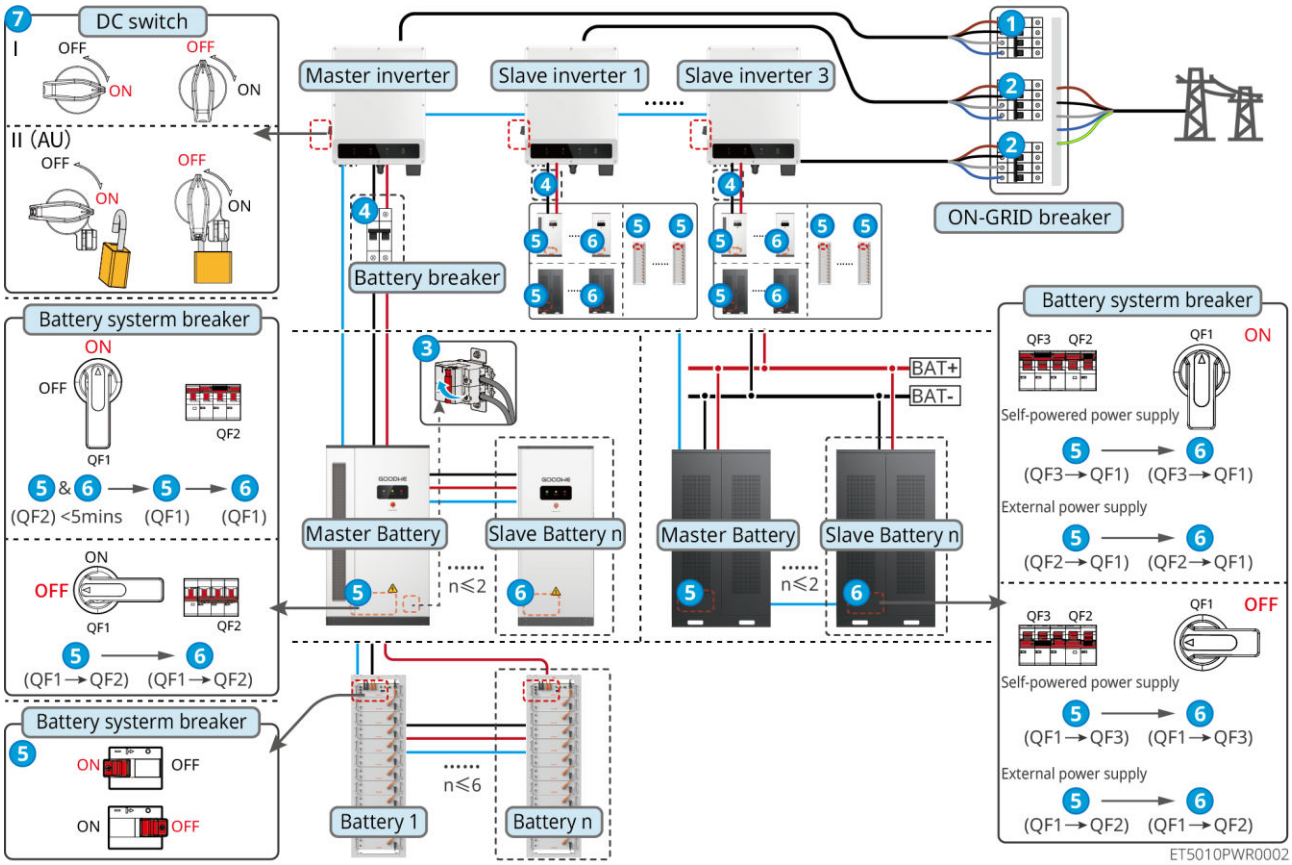

System power off: ❶ →❷ →❸ →❹ →❺ →❻ →❼

❹: Optional in compliance with local laws and regulations

❻: Step 6 does not apply to GW51.2-BAT-I-G10 & GW56.3-BAT-I-G10

11.1.4 Multiple inverters in parallel, on-grid, BACK-UP ports are not parallel connected

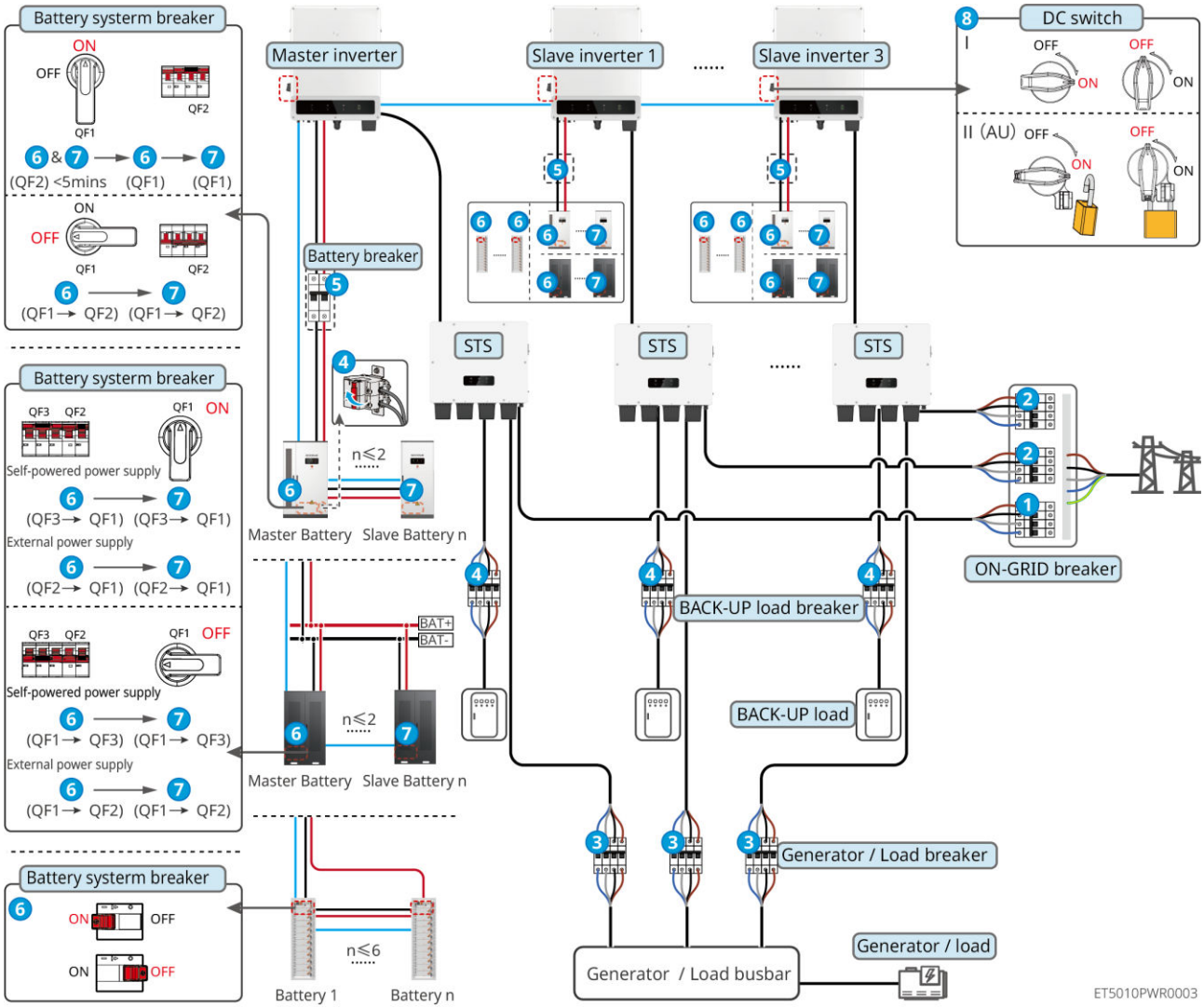

System power off: ❶ →❷ →❸ →❹ →❺ →❻ →❼ →❽

❺: Optional in compliance with local laws and regulations

❼: Step 7 does not apply to GW51.2-BAT-I-G10 & GW56.3-BAT-I-G10

11.1.5 Multiple inverters in parallel, on-grid/off-grid, BACK-UP ports are parallel connected

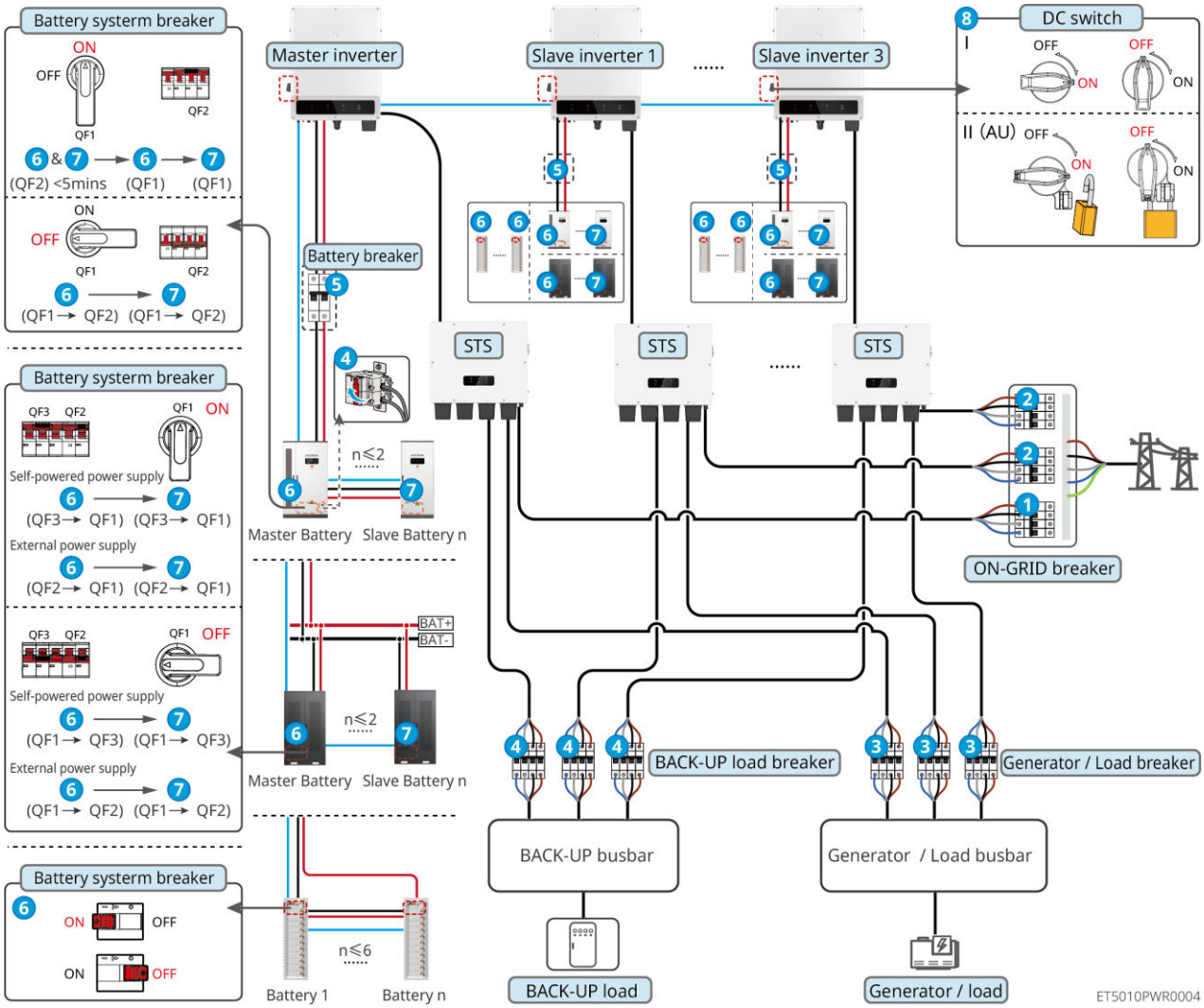

System power off: ❶ →❷ →❸ →❹ →❺ →❻ →❼ →❽

❺: Optional in compliance with local laws and regulations

❼: Step 7 does not apply to GW51.2-BAT-I-G10 & GW56.3-BAT-I-G10

11.2 Removing the Equipment

DANGER
● Make sure that the equipment is powered off. ● Wear proper personal protective equipment during operations.

- Use the PV tool and battery tool included in the package to remove the PV connector and battery connector.

Step 1 Power off the system.

Step 2 Tag different cable types in the system.

Step 3 Disconnect the electrical connections of the inverter, STS, battery, and BACK-UP load in the system.

Step 4 Remove the device from the mounting plate and dismantle the mounting plate.

Step 5 Remove the smart meter and smart dongle.

Step 6 Store the equipment properly. If the equipment needs to be used later, ensure that the storage conditions meet the requirements.

Removing GW51.2-BAT-I-G10, GW56.3-BAT-I-G10

Step 1 Power off the battery system
Step 2 Remove the low-voltage communication lines
Step 3 Remove the power cable with a flat-blade screwdriver
Step 4 Remove the screws between the PCU and the rack, and between the battery and the rack
Step 5 Lift the PCU and battery from the rack
Step 6 Remove the expansion screws or wall fixing brackets
Step 7 Lay down the rack and remove the screws fixing the columns and beams

11.3 Disposing of the Equipment

If the equipment cannot work anymore, dispose of it according to the local disposal requirements for electrical equipment waste. The equipment cannot be disposed of together with household waste.

11.4 Routine Maintenance

WARNING

- Contact after sales service for help if you find any problems that may influence the battery or the hybrid inverter. Disassemble without permission is strictly forbidden.
- Contact after sales service for help if the conductive wire is exposed. Do not touch or disassemble privately because the high voltage danger exists.

- In case of other emergencies, contact After Sales Service as soon as possible and follow their instructions. Or wait for them to help.

Maintaining Item	Maintaining method	Maintaining Period	Maintaining purpose
System clean	1. Check the heat sink, air intake, and air outlet for foreign matter or dust. 2. Check whether the installation space meets requirements and whether there is any debris around the device.	Once half a year	Prevent heat dissipation failures.
System installation	1. Check whether the equipment are installed securely and whether the screws are installed tightly. 2. Check whether the equipment is damaged or deformed.	Once 6-12 months	Ensure that the equipment is installed securely.
Electrical connection	Check whether the cables are securely connected. Check whether the cables are broken or whether there is any exposed copper core.	Once 6-12 months	Confirm the reliability of electrical connections.
Sealing	Check whether all the terminals and ports are properly sealed. Reseal the cable hole if it is not sealed or too big.	Once a year	Confirm that the machine seal and waterproof performance are intact.

11.5 Troubleshooting

Perform troubleshooting according to the following methods. Contact the after-sales

service if these methods do not work.

Collect the information below before contacting the after-sales service, so that the problems can be solved quickly.

1. Product information like serial number, software version, installation date, fault time, fault frequency, etc.
2. Installation environment, including weather conditions, whether the PV modules are sheltered or shadowed, etc. It is recommended to provide some photos and videos to assist in analyzing the problem.
3. Utility grid situation.

11.5.1 System Communication Troubleshooting

No.	Fault	Solutions
1	Cannot find router SSID	1. Put the router nearer to the Smart Dongle. Or add a WiFi relay device to enhance the WiFi signal. 2. Reduce the number of devices connected to router.
2	After completing all configurations, the Smart Dongle fails connecting to the router.	1. Restart the inverter 2. Check if the SSID, encryption method and password on WiFi configuration page are the same with that of Router. 3. Restart the router. 4. Put the router nearer to the Smart Dongle. Or add a WiFi relay device to enhance the WiFi signal.
3	After completing all configurations, the Smart Dongle fails connecting to the router.	Restart the router and the inverter.
4	Cannot find router SSID on searching page	1. Put the router nearer to the inverter. Or add some WiFi relay devices. 2. Check if the channel number of router is higher than 13. 3. If yes, modify it into a lower number at router configuration page.

11.5.2 Inverter Troubleshooting

Single inverter

No.	Fault	Cause	Solutions
1	Utility Loss	1. Utility grid power fails. 2. The AC cable is disconnected, or the AC breaker is off.	1. The alarm is automatically cleared after the grid power supply is restored. 2. Check whether the AC cable is connected and the AC breaker is on.
2	Grid Overvoltage	The grid voltage exceeds the permissible range, or the duration of high voltage exceeds the requirement of HVRT.	1. If the problem occurs occasionally, the utility grid may be abnormal temporarily. The inverter will recover automatically after detecting that the utility grid is normal. 2. If it occurs frequently, please check if the grid voltage is within the permissible range. ● Contact the local power company if the grid voltage exceeds the permissible range. ● Modify the overvoltage protection threshold, HVRT or disable the overvoltage protection function after obtaining the consent of the local power company if the grid frequency is within the permissible range. 3. Check whether the AC breaker and the output cables are connected securely and correctly if the problem persists.
3	Grid Rapid Overvoltage	The grid voltage is abnormal or ultrahigh.	1. If the problem occurs occasionally, the utility grid may be abnormal temporarily. The inverter will recover automatically after detecting that the utility grid is normal. 2. If the problem occurs frequently, check whether the grid voltage is within the allowed range.

			● Contact the local power company if the grid voltage exceeds the permissible range. ● Modify the grid overvoltage rapid protection threshold after obtaining the consent of the local power company if the grid voltage is within the permissible range.
4	Grid Undervoltage	The grid voltage is lower than the permissible range, or the duration of low voltage exceeds the requirement of LVRT.	1. If the problem occurs occasionally, the utility grid may be abnormal temporarily. The inverter will recover automatically after detecting that the utility grid is normal. 2. If it occurs frequently, please check if the grid voltage is within the permissible range. ● Contact the local power company if the grid voltage exceeds the permissible range. ● Modify the undervoltage protection threshold, LVRT or disable the undervoltage protection function after obtaining the consent of the local power company if the grid frequency is within the permissible range. 3. Check whether the AC breaker and the output cables are connected securely and correctly if the problem persists.
5	Grid 10min Overvoltage	The moving average of grid voltage in 10min exceeds the range of safety requirements.	1. If the problem occurs occasionally, the utility grid may be abnormal temporarily. The inverter will recover automatically after detecting that the utility grid is normal. 2. If the problem occurs frequently, check whether the grid voltage is within the allowed range. ● Contact the local power company if the grid voltage exceeds the

			permissible range. ● Modify the grid overvoltage rapid protection threshold after obtaining the consent of the local power company if the grid voltage is within the permissible range.
6	Grid Overfrequency	Utility grid exception. The actual grid frequency exceeds the requirement of the local grid standard.	1. If the problem occurs occasionally, the utility grid may be abnormal temporarily. The inverter will recover automatically after detecting that the utility grid is normal. 2. If the problem occurs frequently, check whether the grid frequency is within the permissible range. ● Contact the local power company if the grid frequency exceeds the permissible range. ● Modify the overfrequency protection threshold or disable the overfrequency protection function after obtaining the consent of the local power company if the grid frequency is within the permissible range.
7	Grid Underfrequency	Utility grid exception. The actual grid frequency is lower than the requirement of the local grid standard.	1. If the problem occurs occasionally, the utility grid may be abnormal temporarily. The inverter will recover automatically after detecting that the utility grid is normal. 2. If the problem occurs frequently, check whether the grid frequency is within the permissible range. ● Contact the local power company if the grid frequency exceeds the permissible range. ● Modify the underfrequency protection threshold or disable the underfrequency protection function after obtaining the consent of the local power company if the grid

			frequency is within the permissible range, or close Grid Underfrequency function.
8	Grid Frequency Instability	Utility grid exception. The actual grid frequency change rate does not meet the requirement of the local grid standard.	1. If the problem occurs occasionally, the utility grid may be abnormal temporarily. The inverter will recover automatically after detecting that the utility grid is normal. 2. If the problem occurs frequently, check whether the grid frequency is within the permissible range. ● Contact the local power company if the grid frequency exceeds the permissible range. ● Contact the dealer or the after-sales service if the grid frequency is within the permissible range.
9	Anti-islanding	The utility grid is disconnected. The utility grid is disconnected according to the safety regulations, but the grid voltage is maintained due to the loads.	1. Check whether the utility grid is disconnected. 2. Contact the dealer or the after-sales service.
10	LVRT Undervoltage	Utility grid exception. The duration of the utility grid exception exceeds the set time of LVRT.	1. If the problem occurs occasionally, the utility grid may be abnormal temporarily. The inverter will recover automatically after detecting that the utility grid is normal. 2. If the problem occurs frequently, check whether the grid frequency is within the permissible range. If not, contact the local power company. If yes, contact the dealer or the after-sales service.
11	HVRT Overvoltage	Utility grid exception. The duration of utility grid exception exceeds the set time of HVRT.	
12	Abnormal GFCI 30mA	The input insulation impedance becomes low when the inverter is working.	1. If the problem occurs occasionally, it may be caused by a cable exception. The inverter will recover automatically after the problem is solved.
13	Abnormal GFCI 60mA		

14	Abnormal GFCI 150mA		2. Check whether the impedance between the PV string and PE is too low if the problem occurs frequently or persists.
15	Abnormal GFCI		
16	Large DC of AC current L1	The DC component of the output current exceeds the safety range or default range.	1. If the problem is caused by an external fault like a utility grid exception or frequency exception, the inverter will recover automatically after solving the problem. 2. If the problem occurs frequently and the PV station cannot work properly, contact the dealer or the after-sales service.
17	Large DC of AC current L2		
18	Low Insulation Res.	The PV string is short-circuited to PE. The PV system is in a moist environment and the cable is not well insulated to the ground.	1. Check whether the resistance of the PV string to PE exceeds 50kΩ. If no, check the short circuit point. 2. Check whether the PE cable is connected correctly. 3. If it is confirmed that the insulation resistance is indeed lower than the default value in rainy weather, please reset the "Insulation Resistance Protection Point".
19	Abnormal system grounding	1. The PE cable of the inverter is not connected. 2. When the output of the photovoltaic string is grounded, the AC output cables L and N of the inverter are connected reversely.	1. Please confirm if the PE cable of the inverter is properly connected. 2. If the output of the photovoltaic string is grounded, please confirm whether the AC output cables L and N of the inverter are reversely connected.
20	Anti-Reverse power Failure	Abnormal fluctuation of load	1. If the exception is caused by an external fault, the inverter will recover automatically after solving the problem. 2. If the problem occurs frequently and the PV station cannot work properly, contact the dealer or the after-sales

			service.
21	Internal Comm Loss	1. Frame format error 2. Parity checking error 3. Can bus offline 4. Hardware CRC error 5. Send (receive) control bit is receive (send). 6. Transmit to the unit that is not allowed.	Disconnect the AC output switch and DC input switch, then connect them 5 minutes later. Contact the dealer or the after-sales service if the problem persists.
22	AC HCT Check abnormal	The sampling of the AC HCT is abnormal.	Disconnect the AC output switch and DC input switch, then connect them 5 minutes later. Contact the dealer or the after-sales service if the problem persists.
23	GFCI HCT Check abnormal	The sampling of the GFCI HCT is abnormal.	Disconnect the AC output switch and DC input switch, then connect them 5 minutes later. Contact the dealer or the after-sales service if the problem persists.
24	Relay Check Fail	1. Relay Dev Fail 2. The control circuit is abnormal. 3. The AC cable is connected improperly, like a virtual connection or short circuit.	Disconnect the AC output switch and DC input switch, then connect them 5 minutes later. Contact the dealer or the after-sales service if the problem persists.
25	Flash Fault	The internal Flash storage is abnormal	Disconnect the AC output switch and DC input switch, then connect them 5 minutes later. Contact the dealer or the after-sales service if the problem persists.
26	DC Arc Fault	1. The DC terminal is not firmly connected. 2. The DC cable is broken.	Please check if the component connection cables are correctly connected according to the wiring requirements in the quick installation manual.
27	AFCI Self-test Fault	AFCI detection is abnormal.	Disconnect the AC output switch and DC input switch, then connect them 5 minutes later. Contact the dealer or the after-sales service if the problem persists.

28	Cavity Overtemperature	1. The installation location of the inverter is not ventilated. 2. The ambient temperature is too high, exceeding 60℃. 3. Internal fan working abnormally	1. Check the ventilation and the ambient temperature at the installation point. 2. If the ventilation is poor or the ambient temperature is too high, improve the ventilation and heat dissipation. 3. Contact the dealer or after-sales service if both the ventilation and the ambient temperature are normal.
29	BUS Overvoltage	1. The PV voltage is too high. 2. The sampling of the inverter BUS voltage is abnormal.	Disconnect the AC output switch and DC input switch, then connect them 5 minutes later. Contact the dealer or the after-sales service if the problem persists.
30	PV Input Overvoltage	The PV array configuration is not correct. Too many PV panels are connected in series in the PV string.	Check the serial connection of the PV array. Make sure that the open circuit voltage of the PV string is not higher than the maximum operating voltage of the inverter.
31	PV Continuous Hardware Overcurrent	1. The PV configuration is not proper. 2. The hardware is damaged.	Disconnect the AC output switch and DC input switch, then connect them 5 minutes later. Contact the dealer or the after-sales service if the problem persists.
32	PV Continuous Software Overcurrent	1. The PV configuration is not proper. 2. The hardware is damaged.	Disconnect the AC output switch and DC input switch, then connect them 5 minutes later. Contact the dealer or the after-sales service if the problem persists.
33	String1 PV String Reversed	The PV strings are connected reversely.	Check whether the PV1 and PV2 strings are connected reversely.
34	String2 PV String Reversed		
35	String3 PV String Reversed		
36	String4 PV String Reversed		
37	Extern Comm Loss	Communication between the inverter and external	Check whether the STS is working properly.

		STS device fails: STS power supply abnormality The communication protocols of STS and inverter do not match.	
38	Connect Box Failure	The on-grid and off-grid switch of STS takes too long.	Check whether the STS relay is faulty.
39	Internal Fan abnormal	Internal fan abnormal, possible reason: 1. The power supply to the fan is abnormal; 2. Mechanical failure (blocked rotation); 3. Fan aging damage.	Disconnect the AC output switch and DC input switch, then connect them 5 minutes later. Contact the dealer or the after-sales service if the problem persists.
40	External fan abnormal	Possible cause of external fan abnormal: 1. The power supply to the fan is abnormal.: 2. Mechanical failure (blocked rotation); 3. Fan aging damage.	

Multiple inverters in parallel

No.	Fault	Cause	Solutions
1	Abnormal parallel CAN communicatio n	The connection of the parallel communication cable is abnormal, or there is an inverter offline in the parallel system.	1. Check that all inverters are powered on. 2. Check if the parallel communication cable of the inverter is securely connected. 3. Check if the parallel CAN communication DIP switch of the inverter is abnormal. 4. Check if the software and hardware versions of the device are consistent.
2	Reverse connection of power grid in parallel	Reverse the line sequence for off grid parallel operation	Check if the line sequence of all inverters connected to the STS AC port is consistent when the inverters are off grid and parallel connected.

	system		

11.5.3 Battery Fault

GW100KWH-D-10, GW100KWH-D-10(Extension)

No.	Fault	Cause	Solutions
1	Grid overvoltage protection	Continue charging when the battery is fully charged	Stop charging, if the system is not automatically restored, contact professional technician to restart the system.
2	Grid undervoltage protection	Continue discharging when the battery is fully discharged	Stop discharging, if the system is not automatically restored, contact professional technician to restart the system.
3	AC overcurrent protection	During the charging and discharging process, the current exceeds the maximum system current.	Reduce power, if the system is not automatically restored, contact professional technician to restart the system.
4	Battery over temperature protection	Excessive temperature during charging and discharging process.	Reduce battery temperature, if the system is not automatically restored, contact professional technician to restart the system.
5	Battery low temperature protection	The temperature is too low during the charging and discharging process.	Increase battery temperature, if the system is not automatically restored, contact professional technician to restart the system.
6	Battery pole overtemperature protection	Excessive temperature during charging and discharging process.	Reduce battery temperature, if the system is not automatically restored, contact professional technician to restart the system.
7	Battery imbalance protection	Excessive temperature or pressure difference between individual cells.	Stop charging and discharging, and wait for the temperature difference to recover, and balance the pressure difference if it is too large.
8	Insulation resistance protection	The insulation resistance of the system is low.	Check the grounding.
9	Pre-charge Failure	Pre-charge circuit components is damaged.	Check the pre-charging circuit components.
10	Fault on data collecting	Abnormality on voltage, temperature, and current	Check the corresponding cable.

	cables	data collection cables.	
11	System air conditioning malfunction	Fault occurs in the air conditioning system.	Contact the after-sales service.
12	Relay open-circuit	Relay fault	Replace relay.
13	Relay short circuit	Relay fault	Replace relay.
14	Cluster Fault	Loss of slave cluster	Check the reliability of the master and slave harness connections
15	PCS communicatio n lost	PCS Wire harness exception	Troubleshooting the Wiring Harness Connections for Reliability
16	BMU communicatio n fault	Abnormal communication harness between BCU and BMU	Troubleshooting the Wiring Harness Connections for Reliability
17	Open contact sticking fault	Plastic Shell Air Switch Fault	Replace the plastic shell air switch
18	Fire Protection System Triggering	Thermal runaway inside the system	Contact the after-sales service.
19	System air conditioning malfunction	Fault occurs in the air conditioning system.	Contact the after-sales service.

LX C 101-10, LX C120-10, LX C138-10, LX C156-10

No.	Fault	Cause	Solutions
1	Overvoltage charging 2	● Single cell voltage/total voltage is too high ● Voltage sampling wire abnormal	1. Power off and wait for 5 minutes, then restart to see if the fault persists; 2. Contact the after-sale service if the problem persists.
2	Overvoltage charging 3	● Single cell voltage/total voltage is too high ● Voltage sampling wire abnormal	1. Power off and wait for 5 minutes, then restart to see if the fault persists; 2. Contact the after-sale service if the problem persists.

3	Undervoltage discharging 3	● Single cell voltage/total voltage is too low ● Voltage sampling wire abnormal	1. Power off and wait for 5 minutes, then restart to see if the fault persists; 2. Determine the working condition of the inverter, whether the battery has not been charged due to working mode or other issues, try charging the battery through the inverter, and observe whether the fault has been restored. 3. Contact the after-sale service if the problem persists.
4	Undervoltage discharging 2	● Single cell voltage/total voltage is too low ● Voltage sampling wire abnormal	1. Power off and wait for 5 minutes, then restart to see if the fault persists; 2. Determine the working condition of the inverter, whether the battery has not been charged due to working mode or other issues, try charging the battery through the inverter, and observe whether the fault has been restored. 3. Contact the after-sale service if the problem persists.
5	Single cell overvoltage 2	● Single cell voltage/total voltage is too high ● Voltage sampling wire abnormal	1. Power off and wait for 5 minutes, then restart to see if the fault persists; Contact the after-sale service if the problem persists.
6	Single cell undervoltage 2	Single cell undervoltage	1. Power off and wait for 5 minutes, then restart to see if the fault persists; 2. Determine the working condition of the inverter, whether the battery has not been charged due to working mode or other issues, try charging the battery through the inverter, and observe whether the fault has been restored. 3. Contact the after-sale service if the problem persists.
7	Single cell voltage difference exception 2	Voltage Difference Exception	1. Restart the battery and wait for 12 hours. 2. Contact the after-sale service if the problem persists.

8	Overcurrent Charging 2	● Excessive charging current, abnormal battery current limit: sudden changes in temperature and voltage values ● Inverter response abnormal	1. Power off and wait for 5 minutes, then restart to see if the fault persists; 2. Check whether the set power of the inverter is too high, causing the rated operating current of the battery to be exceeded; 3. Contact the after-sale service if the problem persists.
9	Overcurrent Discharging 2	● Excessive discharging current, abnormal battery current limit: sudden changes in temperature and SOC values ● Inverter response abnormal	
10	Cell high temperature 2	● Cell temperature is too high ● Abnormal temperature sensor	1. Power off and wait for 30 minutes, then restart to check if the fault persists; 2. Contact the after-sale service if the problem persists.
11	Cell Low Temperature 2	● Ambient temperature is too low ● Abnormal temperature sensor	1. Power off and wait for 30 minutes, then restart to check if the fault persists; 2. Contact the after-sale service if the problem persists.
12	Overtemperature Charging 2	● Cell temperature is too high ● Abnormal temperature sensor	1. Power off and wait for 30 minutes, then restart to check if the fault persists; 2. Contact the after-sale service if the problem persists.
13	Low Charging Temperature 2	● Ambient temperature is too low ● Abnormal temperature sensor	1. Power off and wait for 30 minutes, then restart to check if the fault persists; 2. Contact the after-sale service if the problem persists.
14	Overtemperature Discharging 2	● Cell temperature is too high ● Abnormal temperature sensor	1. Power off and wait for 30 minutes, then restart to check if the fault persists; 2. Contact the after-sale service if the problem persists.
15	Low Discharging	● Ambient temperature is	1. Power off and wait for 30 minutes, then

	Temperature 2	too low ● Abnormal temperature sensor	restart to check if the fault persists; 2. Contact the after-sale service if the problem persists.
16	Excessive Temperature Difference 2	Excessive temperature difference	1. Power off and wait for 30 minutes, then restart to check if the fault persists; 2. Contact the after-sale service if the problem persists.
17	Precharge Failure	Precharge MOS close failure	1. Power off and wait for 5 minutes, then restart to see if the fault persists; 2. Contact the after-sale service if the problem persists.
18	Battery Tripping	Battery air switch tripped	1. Wait for 10 minutes, and close the switch; 2. Contact the after-sale service if the problem persists.
19	Battery and inverter communicatio n failure	Battery and inverter communication failure	1. Confirm whether the communication line sequence and DC line are correct, and whether the continuity is normal. 2. Restart the inverter and battery 3. Contact the after-sale service if the problem persists.
20	Specific faults	Specific battery faults	Contact the after-sales service.
21	Cluster Fault	Communication loss of slave cluster Failure of parallel connection	Check the reliability of the communication connection of the master and slave harnesses Please contact the after-sales service center.

GW51.2-BAT-I-G10, GW56.3-BAT-I-G10

No.	Fault	Cause	Solutions
1	Overvoltage charging 2	● Single cell voltage/total voltage is too high ● Voltage sampling wire abnormal	3. Power off and wait for 5 minutes, then restart to see if the fault persists; 4. Contact the after-sale service if the problem persists.
2	Overvoltage	● Single cell	3. Power off and wait for 5 minutes, then

	charging 3	voltage/total voltage is too high ● Voltage sampling wire abnormal	restart to see if the fault persists; 4. Contact the after-sale service if the problem persists.
3	Undervoltage discharging 3	● Single cell voltage/total voltage is too low ● Voltage sampling wire abnormal	4. Power off and wait for 5 minutes, then restart to see if the fault persists; 5. Determine the working condition of the inverter, whether the battery has not been charged due to working mode or other issues, try charging the battery through the inverter, and observe whether the fault has been restored. 6. Contact the after-sale service if the problem persists.
4	Undervoltage discharging 2	● Single cell voltage/total voltage is too low ● Voltage sampling wire abnormal	4. Power off and wait for 5 minutes, then restart to see if the fault persists; 5. Determine the working condition of the inverter, whether the battery has not been charged due to working mode or other issues, try charging the battery through the inverter, and observe whether the fault has been restored. 6. Contact the after-sale service if the problem persists.
5	Single cell overvoltage 2	● Single cell voltage/total voltage is too high ● Voltage sampling wire abnormal	2. Power off and wait for 5 minutes, then restart to see if the fault persists; Contact the after-sale service if the problem persists.
6	Single cell undervoltage 2	Single cell undervoltage	4. Power off and wait for 5 minutes, then restart to see if the fault persists; 5. Determine the working condition of the inverter, whether the battery has not been charged due to working mode or other issues, try charging the battery through the inverter, and observe whether the fault has been restored. 6. Contact the after-sale service if the problem persists.

7	Single cell voltage difference exception 2	Voltage Difference Exception	3. Restart the battery and wait for 12 hours. 4. Contact the after-sale service if the problem persists.
8	Overcurrent Charging 2	● Excessive charging current, abnormal battery current limit: sudden changes in temperature and voltage values ● Inverter response abnormal	4. Power off and wait for 5 minutes, then restart to see if the fault persists; 5. Check whether the set power of the inverter is too high, causing the rated operating current of the battery to be exceeded; 6. Contact the after-sale service if the problem persists.
9	Overcurrent Discharging 2	● Excessive discharging current, abnormal battery current limit: sudden changes in temperature and SOC values ● Inverter response abnormal	
10	Cell high temperature 2	● Cell temperature is too high ● Abnormal temperature sensor	3. Power off and wait for 30 minutes, then restart to check if the fault persists; 4. Contact the after-sale service if the problem persists.
11	Cell Low Temperature 2	● Ambient temperature is too low ● Abnormal temperature sensor	3. Power off and wait for 30 minutes, then restart to check if the fault persists; 4. Contact the after-sale service if the problem persists.
12	Overtemperature Charging 2	● Cell temperature is too high ● Abnormal temperature sensor	3. Power off and wait for 30 minutes, then restart to check if the fault persists; 4. Contact the after-sale service if the problem persists.
13	Low Charging Temperature 2	● Ambient temperature is too low ● Abnormal	3. Power off and wait for 30 minutes, then restart to check if the fault persists; 4. Contact the after-sale service if the problem persists.

		temperature sensor	
14	Overtemperature Discharging 2	● Cell temperature is too high ● Abnormal temperature sensor	3. Power off and wait for 30 minutes, then restart to check if the fault persists; 4. Contact the after-sale service if the problem persists.
15	Low Discharging Temperature 2	● Ambient temperature is too low ● Abnormal temperature sensor	3. Power off and wait for 30 minutes, then restart to check if the fault persists; 4. Contact the after-sale service if the problem persists.
16	Excessive Temperature Difference 2	Excessive temperature difference	3. Power off and wait for 30 minutes, then restart to check if the fault persists; 4. Contact the after-sale service if the problem persists.
17	Precharge Failure	Precharge MOS close failure	3. Power off and wait for 5 minutes, then restart to see if the fault persists; 4. Contact the after-sale service if the problem persists.
18	Battery Tripping	Battery air switch tripped	3. Wait for 10 minutes, and close the switch; 4. Contact the after-sale service if the problem persists.
19	Battery and inverter communication failure	Battery and inverter communication failure	4. Confirm whether the communication line sequence and DC line are correct, and whether the continuity is normal. 5. Restart the inverter and battery 6. Contact the after-sale service if the problem persists.
20	Specific faults	Specific battery faults	Contact the after-sales service.
21	Cluster Fault	Communication loss of slave cluster Failure of parallel connection	Check the reliability of the communication connection of the master and slave harnesses. Please contact the after-sales service center.
22	Software Fault	Software self-check failed	Please contact the after-sales service center.

23	Microelectronics Fault	Electronic component failure	Please contact the after-sales service center.
24	Parallel Cluster System Overload	Exceed the power cable carrying capacity	Stop charging. If it does not automatically recover, please contact a professional technician to restart the system.
25	SN Abnormal	Same SN exists	Please contact the after-sales service center.
26	Air Switch Abnormal	Molded case circuit breaker disconnected abnormally	Replace the Molded case circuit breaker

12 Technical Data

12.1 Inverter Technical Data

Technical Data	GW40K-ET-10	GW50K-ET-10
Battery Input Data		
Battery Type	Li-Ion	Li-Ion
Nominal Battery Voltage (V)	500	500
Battery Voltage Range (V)	200~800	200~800
Start-up Voltage (V)	200	200
Number of Battery Input	1	1
Max. Continuous Charging Current (A)	100	100
Max. Continuous Discharging Current (A)	100	100
Max. Charge Power (W)	44, 000	55, 000
Max. Discharge Power (W)	44, 000	55, 000
PV String Input Data		
Max. Input Power (W)*2	60, 000	75, 000
Max. Input Voltage (V)	1000	1000
MPPT Operating Voltage Range (V)	165~850	165~850
MPPT Voltage Range at Nominal Power (V)	400~850	400~850
Start-up Voltage (V)	200	200
Nominal Input Voltage (V)	620	620
Max. Input Current per MPPT (A)	42/32/42	42/32/42/32

Max. Short Circuit Current per MPPT (A)	55/42/55	55/42/55/42
Max. Backfeed Current to The Array (A)	0	0
Number of MPP Trackers	3	4
Number of Strings per MPPT	2	2
AC Output Data (On-grid)		
Nominal Output Power (W)	40, 000	50, 000
Max. Output Power (W)	40, 000	50, 000
Nominal Apparent Power Output to Utility Grid (VA)	40, 000	50, 000
Max. Apparent Power Output to Utility Grid (VA)	40, 000	50, 000
Nominal Apparent Power from Utility Grid (VA)	40, 000	50, 000
Max. Apparent Power from Utility Grid (VA)	40, 000	50, 000
Nominal Output Voltage (V)	380/400, 3L/N/PE	380/400, 3L/N/PE
Output Voltage Range (V)*3	176~276	176~276
Nominal AC Grid Frequency (Hz)	50/60	50/60
AC Grid Frequency Range (Hz)	45~65	45~65
Max. AC Current Output to Utility Grid (A)	60.6	75.8
Max. AC Current From Utility Grid (A)	60.6	75.8
Nominal AC Current From Utility Grid (A)	60.6 @380V 58.0 @400V	75.8 @380V 72.5 @400V
Max. Output Fault Current (Peak and Duration) (A)	178@2μs	178@2μs
Inrush Current (Peak and Duration) (A)	178@2μs	178@2μs
Nominal Output Current (A)	58.0	72.5
Power Factor	~1 (Adjustable from 0.8 leading to 0.8 lagging)	~1 (Adjustable from 0.8 leading to 0.8 lagging)
Max. Total Harmonic Distortion	<3%	<3%
Maximum Output Overcurrent Protection (A)	156	156
AC Output Data (Back-up)*1		
Back-up Nominal Apparent Power (VA)	40, 000	50, 000
Max. Output Apparent Power(VA)	44, 000 (48, 000 at 60sec, 60, 000 at 10sec)	55, 000 (60, 000 at 60sec, 75, 000 at 10sec)
Nominal Output Current (A)	58.0	72.5
Max. Output Current (A)	66.7	83.3
Max. Output Fault Current (Peak and Duration) (A)	178@2μs	178@2μs
Inrush Current (Peak and Duration) (A)	178@2μs	178@2μs
Maximum Output Overcurrent Protection (A)	156	156

Nominal Output Voltage (V)	380/400, 3L/N/PE	380/400, 3L/N/PE
Nominal Output Frequency (Hz)	50/60	50/60
Output THDv (@Linear Load)	<3%	<3%
Efficiency		
Max. Efficiency	98.1%	98.1%
European Efficiency	97.50%	97.50%
Max. Battery to AC Efficiency	97.7%	97.7%
MPPT Efficiency	99.00%	99.00%
Protection		
Residual Current Monitoring	Integrated	Integrated
PV Reverse Polarity Protection	Integrated	Integrated
Battery Reverse Polarity Protection	Integrated	Integrated
Anti-islanding Protection	Integrated	Integrated
AC Overcurrent Protection	Integrated	Integrated
AC Short Circuit Protection	Integrated	Integrated
AC Overvoltage Protection	Integrated	Integrated
DC Switch	Integrated	Integrated
DC Surge Protection	Type II(Type I+II Optional)	Type II(Type I+II Optional)
AC Surge Protection	Type II	Type II
AFCI	Optional	Optional
Remote Shutdown	Integrated	Integrated
General Data		
Operating Temperature Range (℃)	-35~+60	-35~+60
Relative Humidity	0~95%	0~95%
Max. Operating Altitude (m)	4000	4000
Cooling Method	Smart Fan Cooling	Smart Fan Cooling
User Interface	LED, WLAN+APP	LED, WLAN+APP
Communication with BMS	CAN	CAN
Communication with Meter	RS485	RS485
Communication with Portal	LAN / 4G (Optional)	LAN / 4G (Optional)
Weight (kg)	62	65
Dimension (W×H×D mm)	520×660×260	520×660×260
Noise Emission (dB)	<65	<65
Topology	Non-isolated	Non-isolated
Self-consumption at Night (W)	<15	<15
Ingress Protection Rating	IP66	IP66
DC Connector	MC4 (4~6mm^2)	MC4 (4~6mm^2)
AC Connector	OT	OT
Environmental Category	4K4H	4K4H

Pollution Degree	III	III
Overvoltage Category	DC II / AC III	DC II / AC III
Storage Temperature (℃)	-40~+85	-40~+85
The Decisive Voltage Class (DVC)	Battery: C PV: C AC: C Com: A	Battery: C PV: C AC: C Com: A
Mounting Method	Wall Mounted	Wall Mounted
Active Anti-islanding Method	AFDPF + AQDPF	AFDPF + AQDPF
Type of Electrical Supply System	Three phase Grid	Three phase Grid
Country of Manufacture	China	China
Certification[*4]		
Grid Standards	NRS097-2-1, VDE-AR-N 4105, PPDS 2021 Type A2, 50549-1, NBT32004	
Safety Regulation	IEC62109-1&2	
EMC	EN61000-6-1, EN61000-6-2, EN61000-6-3, EN61000-6-4	

*1. Backup function can be only realized with STS Box (Static Transfer Switch Box).

*2:
In Australia, for most of the PV module, the max. Input power can achieve 2*Pn, Such as the max. input p ower of GW50K-ET can achieve 100000W

*3: Output Voltage Range: phase voltage.

*4: Not all certifications & standards listed, check the official website for details.

12.2 STS Technical Data

Technical Data	STS200-80-10
Electrical Data	
Nominal Output Voltage (V)	380/400, 3L/N/PE
Output Voltage Range (V)	176~276
Nominal AC Frequency (Hz)	50/60
AC Frequency Range (Hz)	45~65
Inverter Side Data	
Nominal Apparent Power(VA)	50, 000
Max. Apparent Power (VA)*1	50, 000
Nominal Current (A)	72.5
Max. Current (A)*2	75.8

Grid Side Data	
Nominal Apparent Power (VA)	50, 000
Max. Apparent Power (VA)	50, 000
Nominal Current (A)	72.5
Max. Current (A)	75.8
Back-up Side Data	
Nominal Apparent Power (VA)	50, 000
Max. Apparent Power without Grid (VA)	55, 000
Max. Apparent Power with Grid (VA)	138000
Nominal Current (A)	72.5
Max. Current (A)*3	83.3
Generator/PV inverter Side Data	
Nominal Apparent Power (VA)	50, 000
Max. Apparent Power (VA)	55, 000
Nominal Current (A)	72.5
Max. Current (A)	83.3
Other Electrical Data	
Nominal Current of AC Side Relay (A)	200.0
Nominal Current of Generator Side Relay (A)	90.0
Switch Time(ms)	<10
General Data	
Operating Temperature Range (℉)	-35℃~+60℃
Max. Operating Altitude (m)	4000
Cooling Method	Natural Convection
Communication with Inverter	RS485
Weight (kg)	16.5
Dimension (W×H×D mm)	510*425*156
Noise Emission (dB)	<48
Topology	Non-isolated
Mounting Method	Wall Mounted

Ingress Protection Rating	IP65
Overvoltage Category	AC III
Protective Class	I
Certification	
Safety Regulation	IEC62109-1/-2
EMC	EN61000-6-1, EN61000-6-2, EN61000-6-3, EN61000-6-4

*1: When the inverter is operating in the off-gird state, Max. Apparent Power of Inverter Side can be reached 55kW.

*2: When the inverter is operating in the off-gird state, Max. Current of Inverter Side can be reached 83.3A.

*3: when the grid is on, the Max. Current of Backup side can be reached 200A.

12.3 Battery Technical Data

Technical Data	LX C 101-10	LX C120-10
Usable Energy (kWh)*1	101.38	119.81
Battery Module	LX C9.2-10: 38.4V 9.21kWh	LX C9.2-10: 38.4V 9.21kWh
Number of Modules	11	13
Cell Type	LFP（LiFePO4）	
Cell Configuration	132S2P	156S2P
Nominal Voltage Range (V)	422.4	499.2
Operating Temperature Range (V)	369.6~468.6	436.8~553.8
Nominal Dis-/Charge Current(A)*2	100	
Nominal Power(kW)*2	42.24	49.92
Short-Circuit Current	4.0kA 0.66ms@468.6V.dc	4.1kA 0.62ms@553.8V.dc
Operating Temperature Range（℃）	Charge: 0~+45: Discharge: -20~+50	

Relative Humidity		0~95%	
Max. Operating Altitude（m）		2000	
Communication		CAN+RS485	
Weight (Kg)		1120	1280
Dimensions（W×H×D mm）		1155×1650×730	
Ingress Protection Rating		IP21	
Storage Temperature（℃）		0~35（＜One Year）：-20~0 or +35~+45（＜Three Months）	
Mounting Method		Grounded	
Round-trip Efficiency*1		96.0%	
Cycle Life*3		4000	
Standard and Certification	Safety	IEC62619, IEC62040, IEC63056	
	EMC	IEC/EN61000-6-1/2/3/4	
	Transportation	UN38.3	

*1: Test conditions, 100% DOD, 0.2C charge & discharge at +25±2 °C for battery system at beginning life. System Usable Energy may vary with different Inverter.

*2: Nominal Charge/Discharge and power derating will occur related to Temperature and SOC.

*3: Based on 2.5~3.65V voltage rang @25±2℃ of Cell under 0.5C/0.5C test condition and 100%DOD 80% EOL.

Technical Data	LX C138-10	LX C156-10
Usable Energy (kWh)*1	138.24	156.67
Battery Module	LX C9.2-10: 38.4V 9.21kWh	LX C9.2-10: 38.4V 9.21kWh

Number of Modules		15	17
Cell Type		LFP（LiFePO4）	
Cell Configuration		180S2P	204S2P
Nominal Voltage Range (V)		576.0	652.8
Operating Temperature Range (V)		504.0~639.0	571.2~724.2
Nominal Dis-/Charge Current(A)*2		100	
Nominal Power(kW)*2		57.60	65.28
Short-Circuit Current		4.2kA 0.57ms@639V.dc	4.3kA 0.53ms@724.2V.dc
Operating Temperature Range（℃）		Charge: 0~+45: Discharge: -20~+50	
Relative Humidity		0~95%	
Max. Operating Altitude（m）		2000	
Communication		CAN+RS485	
Weight (Kg)		1480	1650
Dimensions（W×H×D mm）		1155×2065×730	
Ingress Protection Rating		IP21	
Storage Temperature（℃）		0~35（＜One Year）：-20~0 or +35~+45（＜Three Months）	
Mounting Method		Grounded	
Round-trip Efficiency*1		96.0%	
Cycle Life*3		4000	
Standard	Safety	IEC62619, IEC62040, IEC63056	

and Certification	EMC	IEC/EN61000-6-1/2/3/4
	Transportation	UN38.3

*1: Test conditions, 100% DOD, 0.2C charge & discharge at +25±2 °C for battery system at beginning life. System Usable Energy may vary with different Inverter.

*2: Nominal Charge/Discharge and power derating will occur related to Temperature and SOC.

*3: Based on 2.5~3.65V voltage rang @25±2℃ of Cell under 0.5C/0.5C test condition and 100%DOD 80% EOL.

Technical Data	GW100KWH-D-10	GW100KWH-D-10(Extension)
Battery Data		
Cell Type	LFP (LiFePO4)	
Cell Capacity (Ah)	150	
Module Type/model	LX C14.4-10	
Module Nominal Energy (kWh)	14.4	
Module Configuration	1P30S	
Module Weight（kg）	130	
Number of Packs	7	
Nominal Energy (kWh)	100.8	
Usable Energy (kWh)*1	100@100% DOD, 0.2C	
Nominal Voltage (V)	672	
Operating Voltage Range (V)	567~ 756	
Charging Operating Temperature Range（℃）	0~+55	

Discharging Operating Temperature Range（℃）	-25~+55	
Max. Charge/ Disharge Current (A) *2	90/120	
Max. Charge/ Discharge Rate*2	0.6C/0.8C	
Max. Charge/ Discharge power (kW) *2	60.5/80.6	
Cycle Life *3	4000 Cycles @ 0.5C, 100%DOD, 80%EOL	
Depth of Discharge	100%	
Efficiency		
Round-trip Efficiency	94% @ 100%DOD, 0.5C	
General Data		
Operating Temperature Range (℃)	0~+55/-25~+55	
Storage Temperature (℃)	0~+35 (< One Year); -10~0 (≤One Month); +35~+40 (≤ One Month)	
Relative Humidity	0~95%R.H. No condensation	
Max. Operating Altitude (m)	3000	
Cooling Method	Air Conditioner	
User Interface	LED indicator	
Communication	CAN	
Weight (kg)	1520	1420
Dimension（W×H×D mm)	1200×2070×1050	870×2070×1050
Noise Emission (dB)	<70	
Ingress Protection Rating	IP55	
Anti-Corrosion Class*4	C4 (C5 Optional)	
Fire safety equipment	Aerosol (Perfluorohexanone Optional，Cabinet Level)	
Certification*5		
Safety Regulation	IEC62619/63056，IEC60730-1，CE-LVD 62477-1，IEC62040-1	
EMC	EN IEC61000-6-1，EN IEC61000-6-2，EN IEC61000-6-3，EN IEC61000-6-4	

*1: Test conditions, 100% DOD, 0.2C charge & discharge at +25±2 °C for battery system at beginning life. System Usable Energy may vary with different Inverter.

*2: Actual Dis-/Charge Current and power derating will occur related to Cell Temperature and SOC. And, Max C-rate continuous time is affected by SOC, Cell Temperature, Atmosphere environment temperature ,Air-conditioner refrigeration capacity.

*3: Based on test condition of 25±2℃, 0.5C/0.5C and 80% EOL.

*4: Excluding locks.

*5: Not all certifications & standards listed, check the official website for detail.

Technical Data	GW51.2-BAT-I-G10	GW56.3-BAT-I-G10
Cell Type	LFP (LiFePO4)	
Nominal Energy (kWh)	51.2	56.3
Usable Energy (kWh)	50	55
Nominal Voltage (V)	512	563.2
Operating Voltage Range (V)	459.2~577.6	505.12~635.36
Operation Temperature Range of Cell (℃)	Discharge:-20~+55 Charge:0~+55	
Operation Temperature Range (℃)	0~40(20~30 Recommend)	
Storage Temperature (℃)	+35~+45 (6 months) -20~+35 (12 months)(0~35℃ Recommend)	
Standard Dis-/Charge Current (A)	50/50	
Max. Continuous Charge/Discharge Current (A)	100/110A	
Pulse Discharge Current (A)	150A,10s 120A,60s	
Cycle Life	6000（25±2°C，0.5C，90%DOD，70%EOL）	
Round-trip Efficiency	96%	

Relative Humidity	5～85%，No condensation	
Max. Operating Altitude (m)	3000	
Communication Interface	CAN (Default), RS485 (Optional)	
User Interface	LED indicator	
Weight (kg)	495	540
Dimension（W×H×D mm)	543*520*1815mm	
Ingress Protection Rating	IP20	
Mounting Method	Grounded	
Fire safety equipment	Aerosol (Perfluorohexanone Optional, Cabinet Level)	
Max battery parallel number	6	
Safety Regulation	IEC62619/IEC60730-1/EN62477-1/IEC63056	
EMC	IEC/EN61000-6-1/2/3/4	
Transport	UN38.3	

12.4 Smart Meter Technical Data

Technical parameters			GM330
Input	Grid		Three-phase
	Voltage	Nominal Voltage-Line to N (Vac)	220/230
		Nominal Voltage-Line to Line (Vac)	380/400
		Voltage Range	0.88Un-1.1Un
		Nominal AC Grid Frequency (Hz)	50/60
	Current	Current Transformer Ratio	nA: 50A
Communication			RS485
Communication Distance (m)			1000
User interface			4 LED, Reset button
Accuracy	Voltage/Current		Class 0.5
	Active Energy		Class 0.5
	Reactive Energy		Class 1
Power Consumption(W)			<5
Mechanical	Dimensions (W×H×D mm)		72*85*72
	Weight (g)		240
	Mounting		Din rail
Environment	Ingress Protection Rating		IP20
	Operating Temperature Range (℃)		-30~70
	Storage Temperature Range(℃)		-30~70
	Relative Humidity (non-condensing)		0~95%
	Max. Operating Altitude (m)		3000

Technical parameters			GM3000
Input	Grid		Three-phase
	Voltage	Nominal Voltage-Line to N (Vac)	110/230
		Nominal Voltage-Line to Line (Vac)	230/400
		Voltage Range	0.88Un-1.1Un
		Nominal AC Grid Frequency (Hz)	50/60
	Current	Current Transformer Ratio	120A:40mA
		Number of Current Transformers	3
Communication			RS485
Communication Distance (m)			1000

User interface		3 LED, Reset button
Accuracy	Voltage/Current	Class 1
	Active Energy	Class 1
	Reactive Energy	Class 2
Power Consumption(W)		<3
Mechanical	Dimensions (W×H×D mm)	36*85*66.5
	Weight (g)	450
	Mounting	Din rail
Environment	Ingress Protection Rating	IP20
	Operating Temperature Range (℃)	-25~+60
	Storage Temperature Range(℃)	-30~+70
	Relative Humidity (non-condensing)	0~95%
	Max. Operating Altitude (m)	2000

12.5 Smart Dongle Technical Data

Technical parameters		WiFi/LAN Kit-20
Input voltage (V)		5
Power Consumption (W)		≤3
Connection Interface		USB
Communication	Ethernet Interface	10M/100Mbps Self-adaption
	WLAN	IEEE 802.11 b/g/n @2.4 GHz
	Bluetooth	Bluetooth V4.2 BR/EDR Bluetooth LE Specification
Mechanical Parameters	Dimensions (W×H×D mm)	48.3*159.5*32.1
	Weight (g)	82
	Ingress Protection Rating	IP65
	Installation	Plug and Play
Operating Temperature Range (℃)		-30 - 60

Storage Temperature Range (℃)	-40 - 70
Relative Humidity	0-95%
Max. Operating Altitude (m)	4000

Technical parameters	Ezlink3000
General Data	
Connection Interface	USB
Ethernet Interface (optional)	10/100Mbps self-adaption, Communication distance ≤ 100m
Installation	Plug and Play
Indicator	LED Indicator
Dimensions (W×H×D mm)	49*153*32
Weight (g)	130
Ingress Protection Rating	IP65
Power Consumption (W)	≤2 (typical)
Operating Mode	STA
Wireless Parameter	
Bluetooth Communication	Bluetooth 5.1
WiFi Communication	802.11b/g/n (2.412GHz-2.484GHz)
Environment	
Operating Temperature Range (℃)	-30 - +60℃
Storage Temperature Range (℃)	-30 -+ 70℃
Relative Humidity	0-100% (non-condensing)
Max. Operating Altitude (m)	4000

13 Appendix

13.1.1 How to Perform Meter/CT Detection?

Meter/CT detection is used to auto-check if the Smart Meter and CT are connected in the right way and their working status.

Step 1 Tap **Home** > **Settings** > **Meter/CT Assisted Tes**t to set the function.

Step 2 Tap **Start Test** to start test. Check Test Result after test.

13.1.2 How to Upgrade Firmware Version

Check and upgrade the ARM version, BMS version, AFCI version of the inverter, or firmware version of the communication module. Some devices do not support upgrading the firmware version through SolarGo app.

Method I:

If the Firmware Upgrade dialog box pops up once logging into the app, click Firmware Upgrade to directly go to the firmware information page.

When there is a red dot prompt on the right side of the firmware information, click to view the firmware update information.

During the upgrade process, ensure that the network is stable and the device remains connected to SolarGo, otherwise the upgrade may fail.

Step 1 Tap **Home** > **Settings** > **Firmware Upgrade** to check the firmware version. If the Firmware Upgrade dialog box pops up once logging into the app, click Firmware Upgrade to directly go to the firmware information page.

Step 2 (Optional) Tap **Check for Update** to check whether there is a latest version to be updated.

Step 3 Tap **Firmware Upgrade** as prompted to enter the firmware upgrade page.

Step 4 (Optional) Tap **Learn More** to check the firmware related information, such as **Current Version, New Version, Update Record,** etc.

Step 5 Tap **Upgrade** and follow the prompts to complete the upgrading.

Method II:

The automatic upgrade function is allowed only when a WiFi/LAN module is applied, and the module firmware version is V2.0.1 and above.

After enabling the auto-upgrade function, if there is any update and the device is connected to the network, the corresponding firmware version can be automatically upgraded.

Step 1 Tap **Home** > **Settings** > **Firmware Upgrade** to check the firmware version.

Step 2 Click or , to enable or disable the Automatic Upgrade based on actual needs.

Method III:

The inverter only supports software upgrade through USB flash drive in single inverter scenarios, and USB flash drive upgrade is prohibited in parallel system.

Before upgrading the device with a USB flash drive, please contact the after-sales service center to obtain the software upgrade package and upgrade method.

13.2 Acronyms and Abbreviations

Abbreviation	English Description
U_{batt}	Battery Voltage Range
$U_{batt, r}$	Nominal Battery Voltage
$I_{batt, max (C/D)}$	Max. Continuous Charging Current Max. Continuous Discharging Current
$E_{C, R}$	Rated Energy
U_{DCmax}	Max.Input Voltage
U_{MPP}	MPPT Operating Voltage Range
$I_{DC, max}$	Max. Input Current per MPPT
$I_{SC\ PV}$	Max. Short Circuit Current per MPPT
$P_{AC, r}$	Nominal Output Power
$S_{r\ (to\ grid)}$	Nominal Apparent Power Output to Utility Grid
$S_{max\ (to\ grid)}$	Max. Apparent Power Output to Utility Grid
$S_{r\ (from\ grid)}$	Nominal Apparent Power from Utility Grid
$S_{max\ (from\ grid)}$	Max. Apparent Power from Utility Grid
$U_{AC, r}$	Nominal Output Voltage
$f_{AC, r}$	Nominal AC Grid Frequency
$I_{AC, max(to\ grid)}$	Max. AC Current Output to Utility Grid
$I_{AC, max(from\ grid)}$	Max. AC Current From Utility Grid
P.F.	Power Factor
S_r	Back-up Nominal apparent power
S_{max}	Max. Output Apparent Power (VA) Max. Output Apparent Power without Grid
$I_{AC, max}$	Max. Output Current
$U_{AC, r}$	Nominal Output Voltage
$f_{AC, r}$	Nominal Output Frequency
$T_{operating}$	Operating Temperature Range
$I_{DC, max}$	Max. Input Current
U_{DC}	Input Voltage
$U_{DC, r}$	DC Power Supply

U_{AC}	Power Supply/AC Power Supply
$U_{AC, r}$	Power Supply/Input Voltage Range
$T_{operating}$	Operating Temperature Range
P_{max}	Max Output Power
P_{RF}	TX Power
P_D	Power Consumption
$P_{AC, r}$	Power Consumption
$F_{(Hz)}$	Frequency
$I_{SC\ PV}$	Max. Input Short Circuit Current
U_{dcmin}-U_{dcmax}	Range of input Operating Voltage
$U_{AC, rang(L-N)}$	Power Supply Input Voltage
$U_{sys, max}$	Max System Voltage
$H_{altitude, max}$	Max. Operating Altitude
PF	Power Factor
THDi	Total Harmonic Distortion of Current
THDv	Total Harmonic Distortion of Voltage
C&I	Commercial & Industrial
SEMS	Smart Energy Management System
MPPT	Maximum Power Point Tracking
PID	Potential-Induced Degradation
Voc	Open-Circuit Voltage
Anti PID	Anti-PID
PID Recovery	PID Recovery
PLC	Power-line Communication
Modbus TCP/IP	Modbus Transmission Control / Internet Protocol
Modbus RTU	Modbus Remote Terminal Unit
SCR	Short-Circuit Ratio
UPS	Uninterruptible Power Supply
TOU	Time of Use
ESS	Energy Storage System
PCS	Power Conversion System
SPD	Surge Protection Device

DRED	Demand Response Enabling Device
RCR	Ripple Control Receiver
AFCI	AFCI
GFCI	Ground Fault Circuit Interrupter
RCMU	Residual Current Monitoring Unit
FRT	Fault Ride Through
HVRT	High Voltage Ride Through
LVRT	Low Voltage Ride Through
EMS	Energy Management System
BMS	Battery Management System
BMU	Battery Measure Unit
BCU	Battery Control Unit
SOC	State of Charge
SOH	State of Health
SOE	State Of Energy
SOP	State Of Power
SOF	State Of Function
SOS	State Of Safety
DOD	Depth of discharge

13.3 Term Explanation

Overvoltage category definition

Category I: Applies to equipment connected to a circuit where measures have been taken to reduce transient overvoltage to a low level.

Category II: Applies to equipment not permanently connected to the installation. Examples are appliances, portables tools and other plug-connected equipment.

Category III: Applies to a fixed equipment downstream, including the main distribution board. Examples are switchgear and other equipment in an industrial installation.

Category IV: Applies to equipment permanently connected at the origin of an installation (upstream of the main distribution board). Examples are electricity meters, primary over-current protection equipment and other equipment connected directly to outdoor open lines.

Moisture location category definition

Parameters	Level		
	3K3	4K2	4K4H
Moisture Parameters	0~+40℃	-33~+40℃	-33~+40℃
Temperature Range	5% - 85%	15% - 100%	4% - 100%

Environment category definition

Outdoor: Ambient Temperature: -25~+60℃, applied to Pollution Degree 3 environment.

Indoor Unconditioned: Ambient Temperature: -25~+40℃, applied to Pollution Degree 3 environment.

Indoor conditioned: Ambient Temperature: 0~+40℃, applied to Pollution Degree 2 environment.
Outdoor: Ambient Temperature: 0~+40℃, applied to Pollution Degree 2 environment.

Pollution degree definition

Pollution Degree I: No pollution or only dry, non-conductive pollution occurs. The pollution has no influence.

Pollution Degree II: Normally only non-conductive pollution occurs. Occasionally, however, a temporary conductivity caused by condensation must be expected.

Pollution Degree III: Conductive pollution occurs, or dry. non-conductive pollution occurs, which becomes conductive due to condensation, which is expected.

Pollution Degree IV: Persistent conductive pollution occurs, for example, the pollution caused by conductive dust, rain or snow.