SUNWODA ENERGY

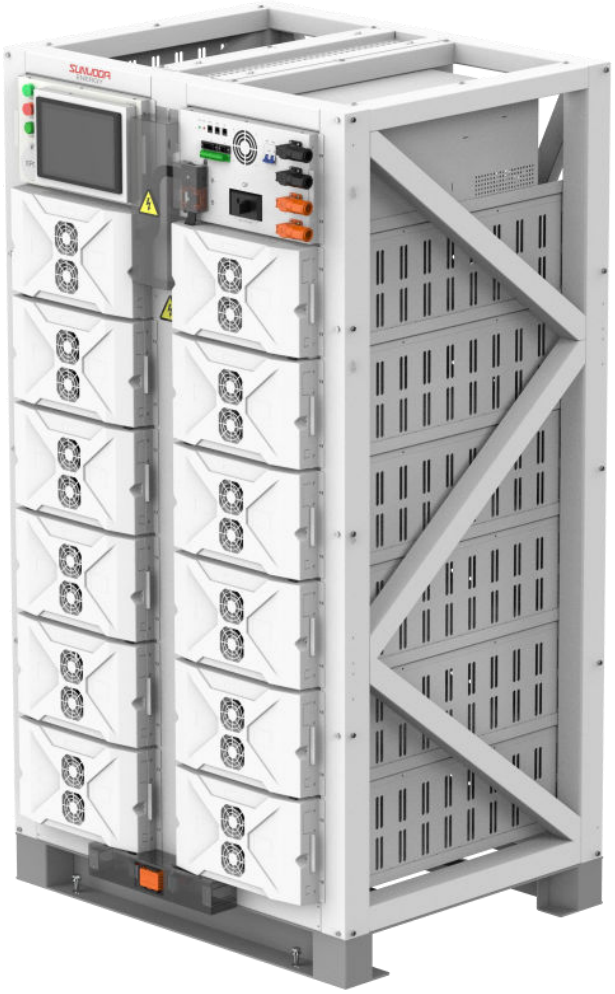

OASIS Rack Pro+

100~240kWh Battery Rack System

User Manual

Preface

Thank you sincerely for purchasing and exploring products developed and manufactured by Shenzhen Sunwoda Energy Technology Co., Ltd. (hereinafter referred to as "Sunwoda"). We genuinely hope that our products and this manual will meet your needs. Your valuable feedback is warmly welcomed, and we will continuously improve and enhance our offerings.

The copyright of this user manual is owned by Sunwoda. All rights not expressly granted herein are reserved. The content is subject to change based on the latest physical product, and revisions may be made without prior notice.

Due to product version upgrades or other reasons, this document may be updated periodically. Unless otherwise agreed, this document serves solely as a product guide. All statements, information, and recommendations provided herein do not constitute any express or implied warranties.

This document and all information contained within are the exclusive property of Sunwoda. No party shall be granted any license to patents, copyrights, trademarks, or other intellectual property rights of the other party through implication, estoppel, or otherwise, based on this document.

For updates or additional information, please contact Sunwoda.

Content

Preface 1
Content 2
I. About This Manual 4
1.1 Attention 4
1.2 Applicable Model 4
1.3 Target Group 5
II. Safety Statement 6
2.1 General Requirement 6
2.2 Installer 6
2.3 Installation Environment 7
2.4 Electrical Connection 8
2.5 Mechanical Installation 9
2.6 Description of the Marking 9
III. Product Introduction 11
3.1 System Introduction 11
3.2 Technical Parameter 11
3.3 Single Line Diagram 12
3.4 Machine Structure 13
IV. Transportation, storage and unpacking inspection 17
4.1 Transportation Requirement 17
4.2 Storage Requirement 18
4.3 Unpacking and Delivery Inspection 19
4.3.1 Unpacking 19
4.3.2 Delivery Inspection 20
V. Installation and Wiring 22
5.1 Installation Requirement 22
5.1.1 Installation Environment Requirement 22
5.1.2 Installation Carrier Requirement 22
5.1.3 Installation Angle Requirement 23
5.1.4 Installation Space Requirement 23
5.1.5 Installation Tool Requirement 24
5.2 Mechanical Installation 25
5.2.1 Handling Equipment 25
5.2.2 Fixed Equipment 27
5.3 Electrical Wiring 28
5.3.1 Wiring Precautions 28
5.3.2 Wire Harness Specification 28
5.3.3 Ground Line Connection 29
5.3.4 Power Line Connection 29
5.3.5 The Auxiliary Power Supply Line Connection 30

5.3.6 Communication Line Connection 31
5.3.7 Local Emergency Stop External Connection (Optional) 33
5.3.8 Parallel Wiring (if required) 34
5.4 Installation Inspection 36
5.4.1 Electrical Inspection 36
5.4.2 Structural Inspection 36
VI. Equipment Operation 37
6.1 Indicator Light Introduction 37
6.1.1 Rack Indicator Light 37
6.1.2 Control Box Indicator Light 37
6.2 Operation Guidance 37
6.2.1 Pre-operation Inspection 37
6.2.2 Power-up Procedure 38
6.2.3 Turn off the Power 40
6.2.4 Emergency Shutdown 41
VII. Maintenance Guidance 42
7.1 Maintenance Precautions 42
7.2 Maintenance Content 42
VIII. Fault Handling 44

I. About This Manual

1.1 Attention

This product is a specialized power distribution equipment. To ensure the correctness and safety of installation, use and other operations, be sure to read this manual thoroughly before starting operations. The installer should be professionally trained with a background in electrical technology and be familiar with local grid codes and related requirements. We will not be held liable for any form of damage or injury resulting from failure to follow the operating instructions highlighted in this manual.

This manual is centered around the OASIS Rack Pro+ series and details its product features, installation specifications, usage practices, troubleshooting, and routine maintenance. Due to product iteration, the contents of the manual will be constantly updated, the specific product details also please refer to the actual product purchased.

Finally, we hope that this product can fully meet your needs, and we also look forward to your valuable comments on this product. If you have any requests, please feel free to feedback us.

1.2 Applicable Model

This manual applies to the following product models：

OASIS Rack Pro+：CIESS-100-RP、CIESS-120-RP、CIESS-140-RP、CIESS-160-RP、CIESS-180-RP、CIESS-200-RP、CIESS-220-RP、CIESS-240-RP

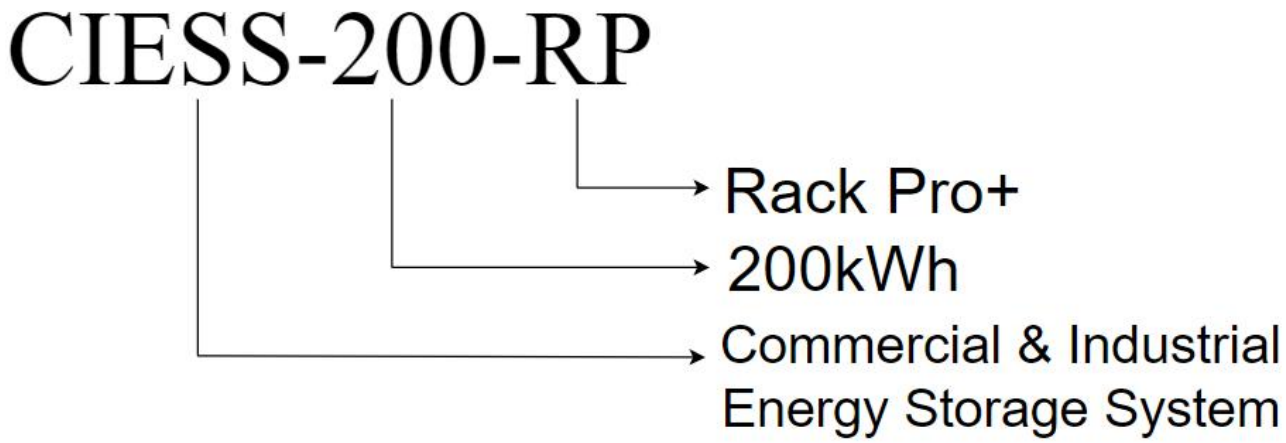

Figure 1.2.1 Description of model

1.3 Target Group

This product should only be operated by a professional who has the following basic competencies:

(1) Professional training on how to deal with the hazards and risks arising during the installation and use of electrical equipment.

(2) Understand the installation and commissioning of conventional electrical equipment and related devices, and understand the specification requirements of local regulations and standards.

(3) Possess professional electrical certifications.

II. Safety Statement

2.1 General Requirement

(1) Before installing the equipment, disconnect the loads and grid circuits and turn the equipment off. Avoid major injuries to personnel or major damage to equipment.

(2) Static electricity may cause irreversible damage to the internal components of the equipment. When using the product, be sure to comply with the electrostatic protection specifications.

(3) This product cannot be used to connect life support equipment and medical equipment directly. To ensure your safety and compliance, please consult the supplier in advance of purchase.

(4) Before the product is turned on, please check the equipment and do not leave installation tools or other unnecessary items inside the cabinet to avoid damage to the equipment after powering on.

(5) Maintenance equipment, be sure to ensure that the equipment has been safely disconnected from the power supply, and wait for the machine to have all the electrically charged devices discharged (more than 10min), so as not to cause significant damage.

2.2 Installer

(1) All operations of the equipment must be carried out by professional, qualified technicians who have undergone special training and have professional electrical certificates, and the technicians should be familiar with the relevant standards and safety codes of the project location.

(2) The operator should read this document before installation and understand the structure, working principle and precautions of the product in detail before starting operation.

(3) In order to ensure personal safety, please wear personal protective equipment and prepare the insulating tools that need to be used before starting to operate the equipment. Personal protective equipment includes safety clothing, safety helmets, safety shoes, insulated gloves, goggles, etc., and insulated tools can be prepared with an insulating layer including the handle of the tool.

(4) In order to ensure the safety of the equipment, contact with electronic devices need to wear

electrostatic bracelets, electrostatic gloves, anti-static clothing when operating.

2.3 Installation Environment

(1) In order to avoid the disturbance of the noise of the equipment operation, it is necessary to install the equipment in an area far away from the residents' life, not less than 50m.

(2) In order to ensure heat dissipation, the equipment should be in a well-ventilated space（not less than $50m^3$）, to avoid the surrounding airflow.

(3) In order to facilitate maintenance, the equipment should leave enough space around, see Chapter 5.1 for details.

(4) To ensure normal operation, the ambient temperature of the equipment should be between 0~55℃.

(5) In order to guarantee the service life, please install the equipment in a dry and clean environment, avoid the air containing a lot of water vapor and dust（environmental humidity requirements: 0~95%, no condensation）, avoid direct sunlight, snow and rain and other extreme environments.

(6) In order to protect the use, as far as possible to avoid equipment in the smoke, dust and other particles in the environment (air pollution index < 300), to ensure that the environment around the product is clean and tidy.

(7) To ensure use, it is strictly prohibited to operate the equipment in harsh or humid environments such as smoke, rain, snow, etc., and surrounding debris should be promptly disposed of before operation.

(8) In order to avoid equipment failure, the equipment should be installed in an area away from the liquid（not less than 50m）. It is prohibited to install it below the water pipes, air outlets and other locations that are prone to condensation; it is prohibited to install it below the air conditioning outlets, vents, computer room outlet windows and other locations that are prone to water leakage.

(9) To avoid major damage, do not place flammable or explosive items around the equipment. The

equipment should be kept away from any heat and fire sources.

(10) When the equipment is in operation, do not cover the air vents, heat dissipation system or use other items to cover them.

2.4 Electrical Connection

(1) The installation of the product should meet the requirements of local power grid regulations and safety codes.

(2) Product operation involves the risk of high voltage electric shock, only electricians with specialized skills should operate the equipment.

(3) To avoid high voltage breakdown, do not touch the conductors connected to the grid circuit.

(4) Wear a static electricity bracelet when operating the electronic components inside the equipment.

(5) It is prohibited to damage the grounding conductor and to operate the equipment without the grounding conductor installed.

(6) When installing, operating, or maintaining the equipment, it is prohibited to wear watches, bracelets, bangles, rings, necklaces, and other easily conductive objects to avoid electric shock burns.

(7) The voltage at the point of contact should be measured before contacting any conductor surface or terminal to ensure that there is no danger of electric shock.

(8) Solvents such as water, alcohol or oil are prohibited to clean electrical parts inside and outside the cabinet.

(9) In the process of equipment operation, such as the discovery of faults that may lead to personal injury or equipment damage, should immediately terminate the operation, report to the person in charge, and take effective protection measures.

(10) Do not power up the equipment before installation is completed or confirmed by a professional.

2.5 Mechanical Installation

(1) Considering the weight of the equipment, the person who carries out the lifting or forklift loading operation needs to carry out the relevant training and be qualified before taking up the job.

(2) Work at height shall wear a helmet, safety belt or waist rope, tied to a solid and sturdy structural components, is strictly prohibited to move hanging on the unsound objects or sharp edges of the metal, to prevent the hook slipped off the fall accident.

(3) The lifting tools must be inspected, the tools need to be prepared and qualified by professional organizations, prohibit the use of scarred, unqualified or beyond the inspection of the validity of the tools to ensure that the tools are solid, and can bear the weight of the equipment.

(4) Before installing the equipment, first of all, make sure that other products have been fixed well, to avoid other products due to the center of gravity is not stable, or tilting collapse, resulting in the installation of personnel were smashed, equipment broken and other problems.

(5) Drilling holes in the equipment is strictly prohibited. Drilling holes will damage the sealing, electromagnetic shielding performance, internal devices and cables of the equipment, and metal shavings from drilling holes into the equipment will lead to a short circuit of the circuit board.

(6) When installing the equipment, please make sure that the bottom carrier of the product is strong and reliable and can carry the weight of the cabinet to avoid damage to the equipment.

2.6 Description of the Marking

For personal and equipment safety, follow the safety precautions marked on the equipment when installing, operating, and maintaining the equipment. If the relevant markings become unclear due to long-term use, replace them promptly. The categories of markings and symbols on the product are as follows.

Identifier

ICON	Description
	Front side up, it is forbidden to place the electrical cabinet horizontally, tilted or upside down.
	Carefully and gently put, to avoid the transportation environment is too intense collision friction damage to the equipment.
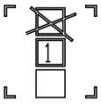	Maximum number of stacking layers: 1 layer.
	Pay attention to moisture protection and avoid the product being exposed to rain or moisture.
	Take care to protect against high temperatures and avoid exposing the product to direct sunlight.
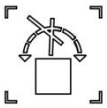	No tumbling.
	Stay safe.
	There is an electrical hazard. Equipment should only be operated and maintained by specialized personnel.
	It is necessary to wait 10min after power failure to ensure that the machine is fully discharged!
	Hazardous hot surface symbol. Watch out for high temperatures and burns.
	The equipment needs to be recycled at the end of its life.

III. Product Introduction

3.1 System Introduction

OASIS Rack Pro+ industrial and commercial series products are high-security, high-reliability, standardized series products developed for industrial and commercial application scenarios. It adopts modular system configuration to flexibly match all kinds of industrial and commercial scenarios, and with a variety of energy storage inverters, it can support on-grid, off-grid, and on and off-grid scenarios; and it supports parallel expansion, which is convenient for system expansion, and it can realize the shift of peaks and valleys and the staggered peaks of electricity consumption, and alleviate the pressure on the power grid.

Products include battery box, control box, battery management system, etc.

3.2 Technical Parameter

Product Series	OASIS Rack Pro+							
Product Model	CIESS-100-RP	CIESS-120-RP	CIESS-140-RP	CIESS-160-RP	CIESS-180-RP	CIESS-200-RP	CIESS-220-RP	CIESS-240-RP
Battery Side Parameter								
Cell Type	LFP							
Cell Specification	3.2V 314Ah							
PACK Capacity	20kWh							
PACK Quantity	5	6	7	8	9	10	11	12
Nominal Capacity	100kWh	120kWh	140kWh	160kWh	180kWh	200kWh	220kWh	240kWh
Nominal Voltage	320V	384V	448V	512V	576V	640V	704V	768V
Voltage Range	290~360V	348~432V	406~504V	464~576V	522~648V	580~720V	638~792V	696~864V
System Parameter								
Communication Interface	RS485、CAN							
Display	Touch Screen, Cloud Platform							
Protection Rating	IP20							
Cooling Method	Fan Cooling							
Installation Type	Indoor							
Ambient	0~55℃（＞45℃ derating）							

Temperature	
Humidity	0 ~ 95% （non-condensing）
Noise	＜75dB
Altitude	3000m
Size (W*D*H)	1160*976*2060mm
Weight	＜2100kg

3.3 Single Line Diagram

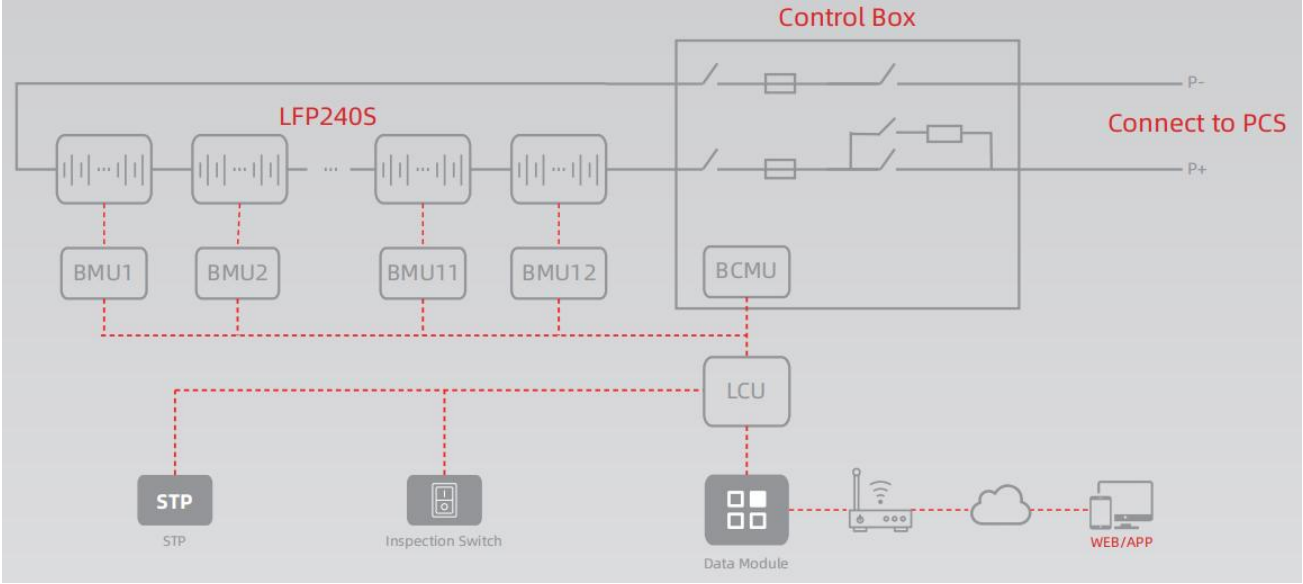

3.4 Machine Structure

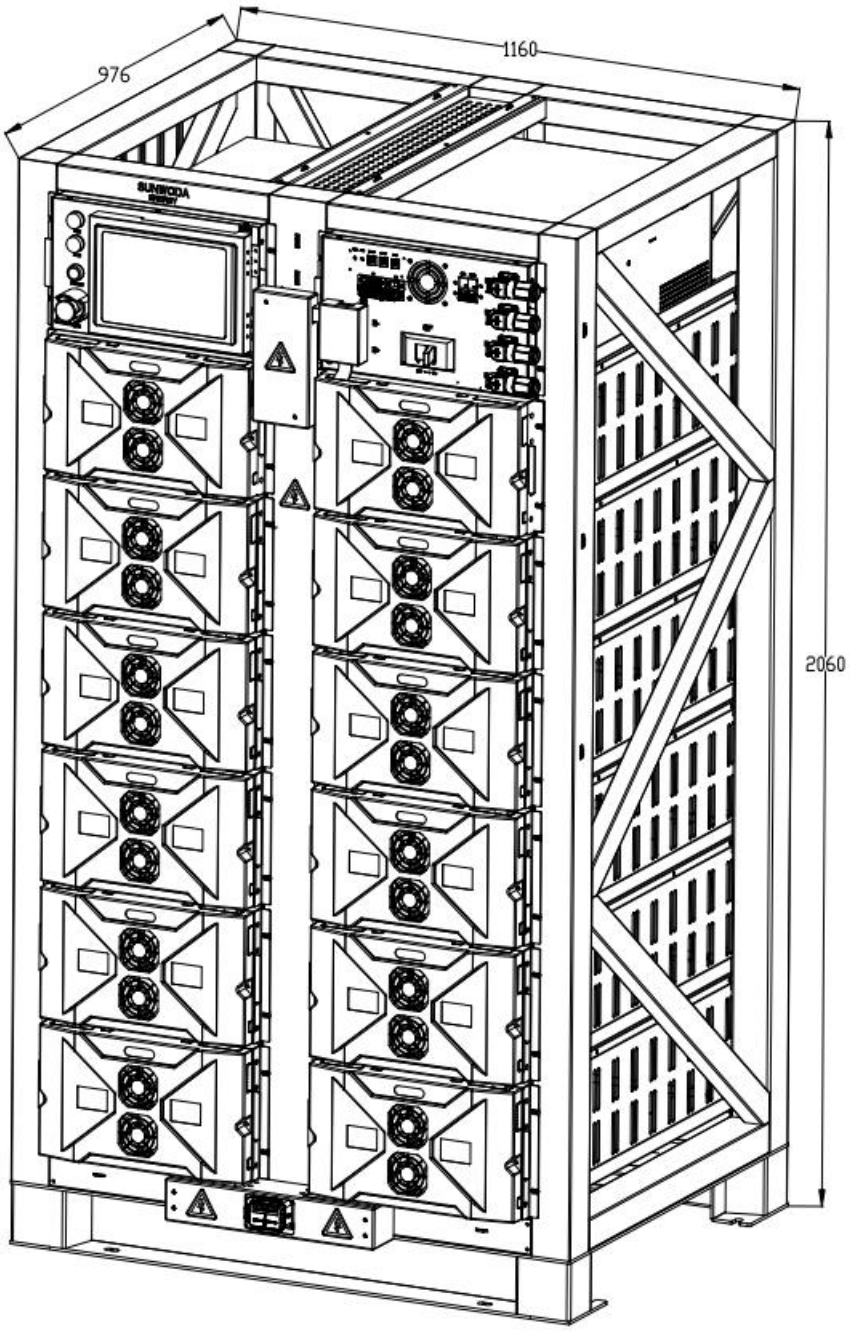

Figure 3.4.1 Schematic Dimension of Rack

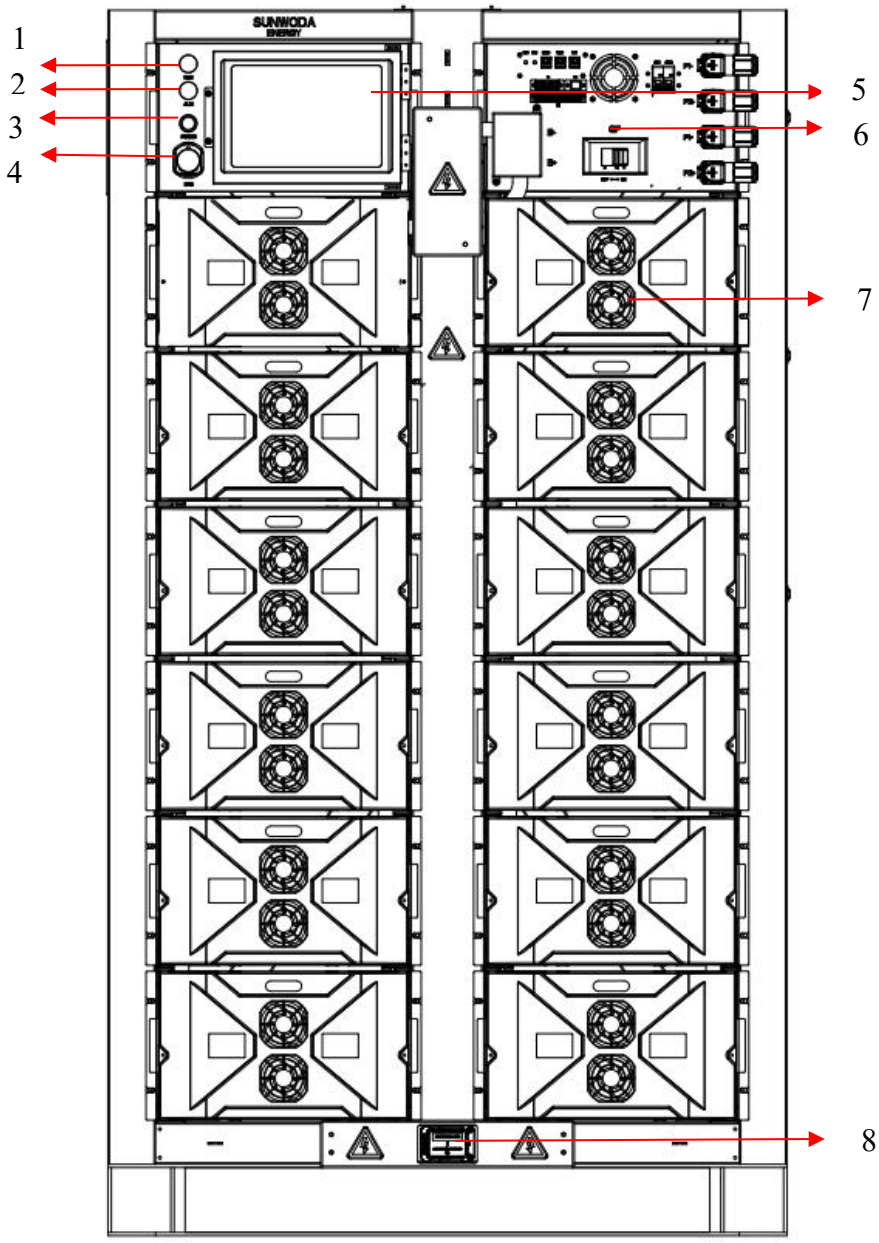

Figure 3.4.2 Main View

NO.	Name	NO.	Name
1	Run Indicator Light	5	Touch Screen
2	Fault Indicator Light	6	Control Box
3	Power on/off Button	7	Battery PACK
4	Emergency Stop Switch	8	Maintenance Switch

Products of different capacities are achieved by reducing the number of PACK, which can support 5 to 12 PACK with a capacity of 100~240kWh. The positions where the PACK is removed will be covered by the outer panel. The front view is the same as a full configuration of 240kWh, with 6 to 8 PACK (a capacity of 120~160kWh). The positions of the control box and touch screen have been

adjusted, the five packs are arranged in a single-row bracket layout, as shown in the following figure.

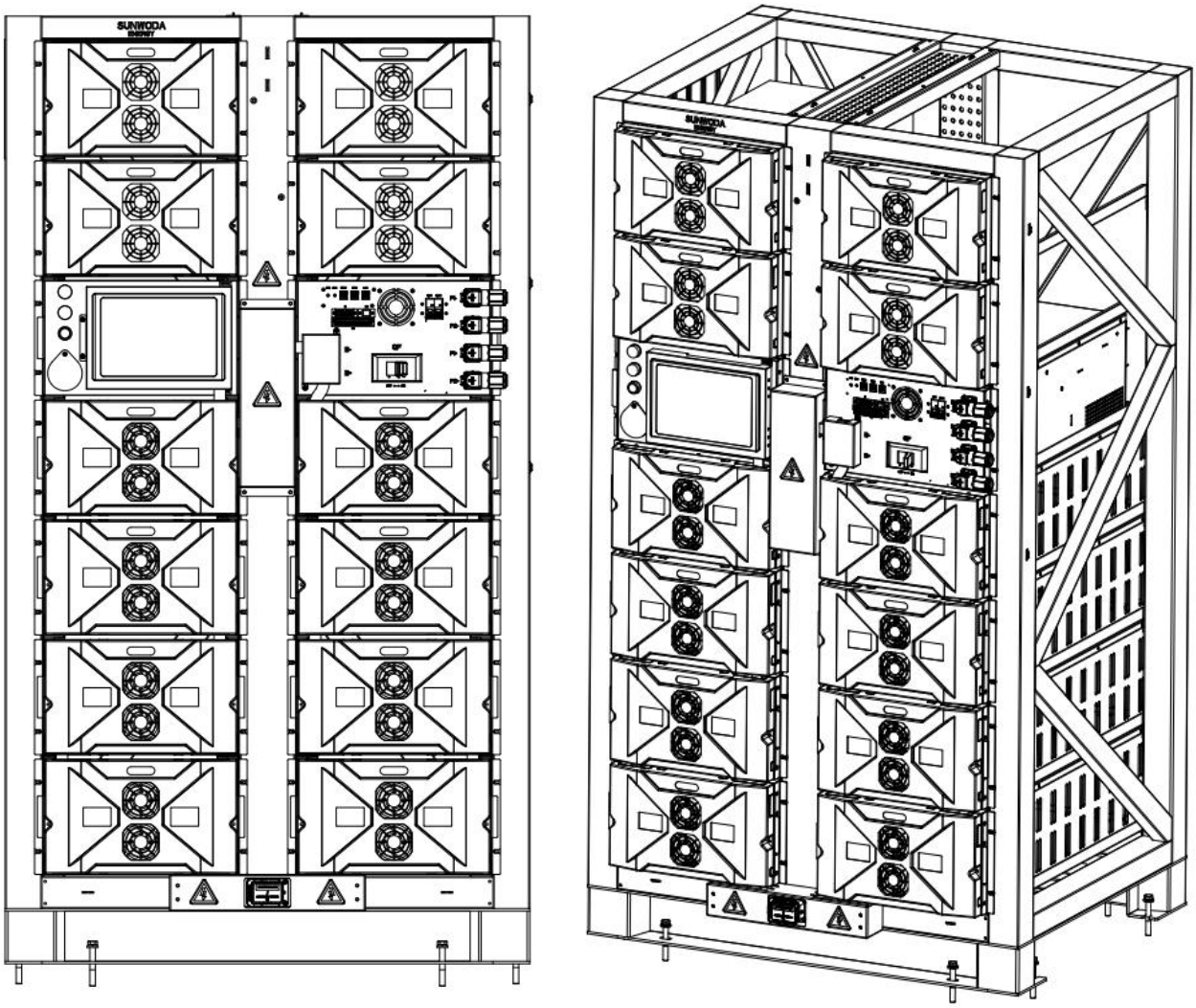

Figure 3.4.3 Product Layout Diagram of 6 to 8 PACK (with a capacity of 120~160kWh)

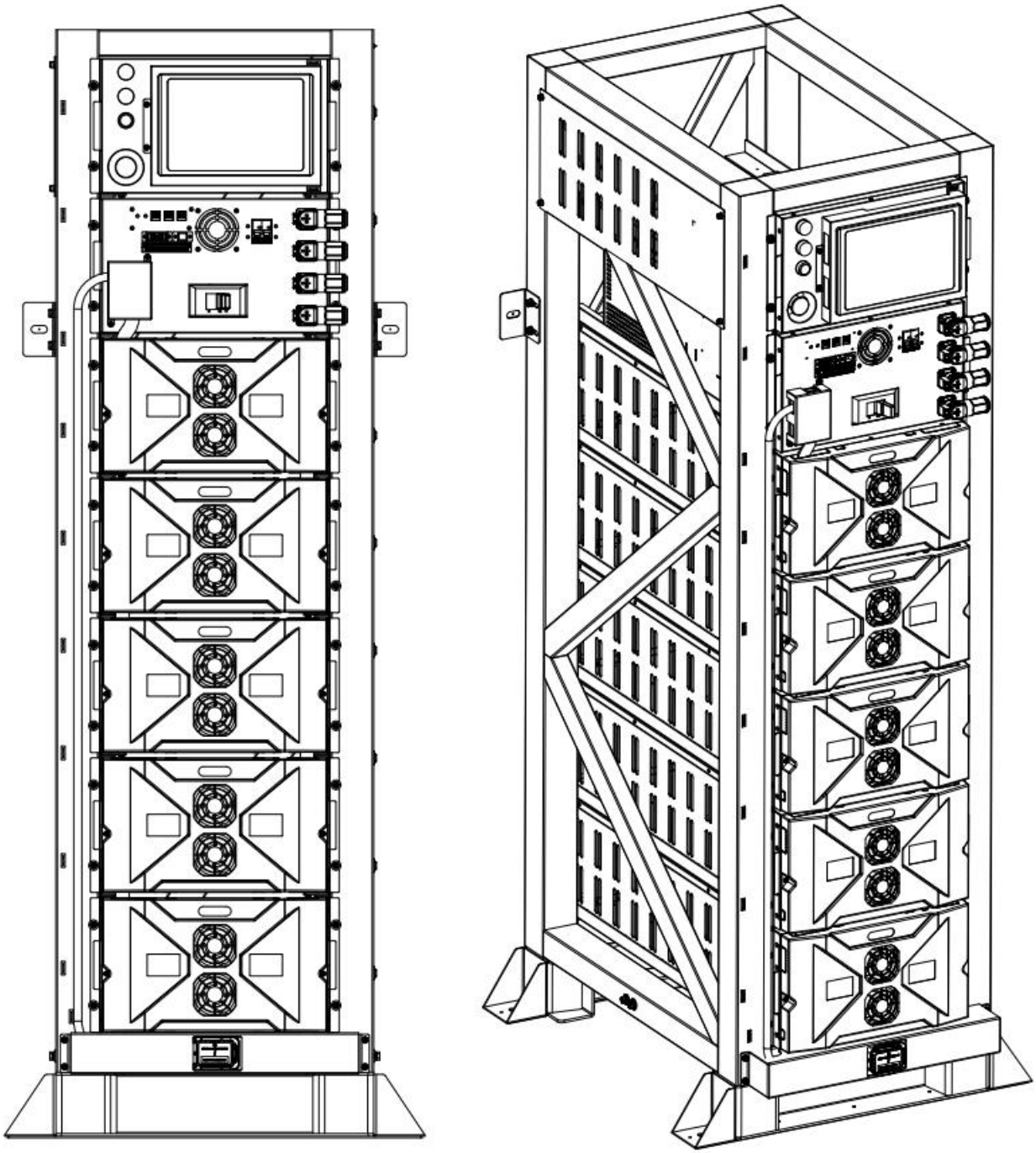

Figure 3.4.4 Product Layout Diagram of 5 PACK (with a capacity of 100kWh)

IV. Transportation, storage and unpacking inspection

4.1 Transportation Requirement

Improper transportation may cause injuries or equipment damage, when transporting, please be sure to follow the following transportation requirements:

(1) Please check whether the package is intact before transportation. If you find any signs of damage, do not open the package and contact your supplier.

(2) Only professionally trained and instructed personnel should carry out transportation operations on public roads.

(3) Whenever possible, transport the product in its packaging and follow the safety regulations indicated on the packaging.

(4) Please use appropriate fixing devices, such as ropes, support frames, etc., during transportation to ensure that the equipment will not be shifted due to shaking or vibration during transportation.

(5) Keep the equipment upright during transportation. Do not allow the equipment to be placed horizontally or reverse upside down, so as to avoid the internal modules of the equipment sliding and causing damage to the equipment.

(6) The tilt angle of the equipment when placed upright should be less than 5° .

(7) The equipment should be transported as a complete unit. Any detachment of the system without our permission and consequent damage to the equipment is not covered by the warranty.

(8) Avoid severe vibration, shock or crushing during transportation. Sudden lowering or lifting is also not allowed. Please minimize bumps and tilts during transportation.

(9) Please refer to the front-facing sign on the cabinet for the direction of transportation of the equipment, and avoid inverting, tilting, dropping, mechanical impact, rain, snow and falling into the water.

(10) Comply with the international road transportation rules and meet the regulatory requirements of the transportation regulatory authorities of the country of origin, route and destination.

(11) The transportation should choose sea transportation or road with good condition, and do not support railroad and air transportation.

(12) The loading, unloading and handling process during transportation must be carried out by professional personnel.

(13) Please pay attention to the loading and unloading and handling process during transportation, so as to avoid damage to the equipment or personnel.

(14) Be sure to wear appropriate personal protective equipment, such as helmets and non-slip shoes, during loading, unloading and handling during transportation.

(15) During transportation, make sure the foundation is protected from moisture if necessary.

(16) The loading, unloading, and handling process during transportation can be carried out by forklift, crane, or wheelbarrow, etc., and a trial loading and lifting can be carried out to ensure the load-bearing capacity of the loading equipment when forklifting or lifting.

(17) Please arrange auxiliary personnel during the handling process to avoid the situation that the equipment size is too big to block the driver's sight.

(18) Please pay attention to the center of gravity of the equipment and keep the equipment balanced.

4.2 Storage Requirement

If the product is not installed on site immediately after arrival, the product should be stored with the outer packaging and the following matters should be followed:

⚠ Warning
(1) Store the battery indoors. No direct sunlight or rain, no extreme cold or heat, dry and well ventilated, away from heat and fire sources.
(2) If the battery is bulging, deformed, broken or leaking, it shall be scrapped without regard to the storage time.
(3) When storing the battery, it should be placed correctly according to the identification of the packing box, and it is strictly prohibited to place it upside down, sideways, or at an angle, and when stacking it, it should conform to the yardage requirements on the outer

packaging.
(4) The site must be equipped with fire-fighting facilities that meet the requirements, such as firefighting sand and fire extinguishers.
⚠ **Warning**
(1) Batteries are recommended to be used in a timely manner. For batteries that have been stored for a long period of time, please carry out regular replenishment of electricity, otherwise the batteries may be damaged.
(2) The ambient air must not contain corrosive or flammable gases, the surrounding environment is clean, there is no large amount of infrared and other radiation, no organic solvents or corrosive gases, and there is no metallic conductive dust.
⚠ **Notice**
(1) During storage, it is necessary to keep relevant proof of compliance with product storage requirements, such as temperature and humidity log data, photos of the storage environment and inspection reports.
(2) Store in a clean and dry place and protect from dust and moisture. Prohibit erosion by rain or ground water.
(3) Storage environment requirements: Recommended storage temperature: 20℃～30℃. Relative humidity: 5% RH～80% RH. Dry, ventilated and clean. Avoid contact with corrosive organic solvents, gases and other substances. Avoid direct sunlight. The distance from the heat source should not be less than two meters.
(4) From the date of shipment from the manufacturer, the battery needs to be maintained at intervals of up to 12 months, and the desiccant inside it should be replaced in a timely manner.

4.3 Unpacking and Delivery Inspection

4.3.1 Unpacking

Once the product has been transported to the vicinity of the installation site, unpack it and check that the delivery items are complete.

Step1. Remove the bolts on the four cabinet feet at the bottom of the packing crate.

Step2. Remove the top and side panels of the crate.

Step3. Remove the external packing materials from the product.

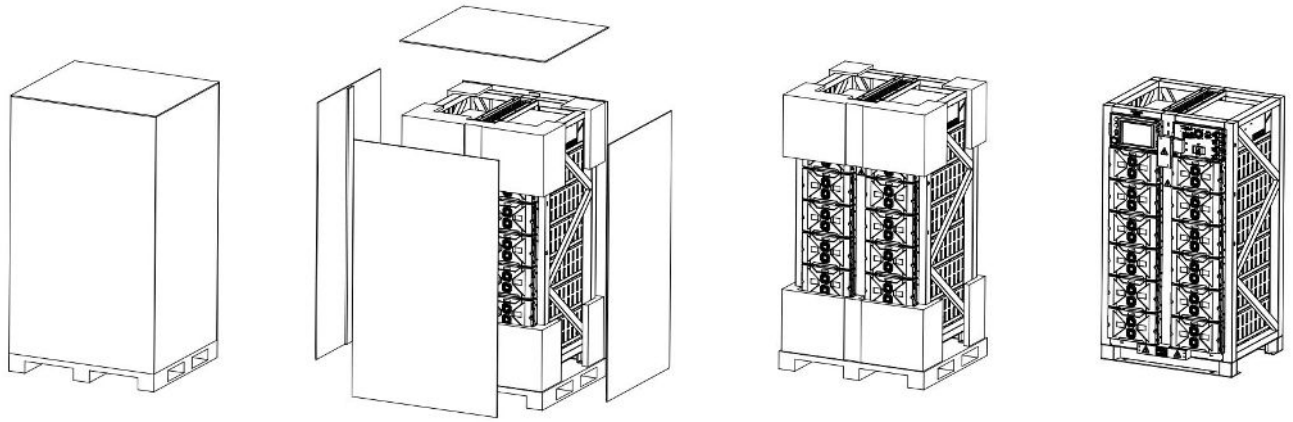

4.3.2 Delivery Inspection

Please check against the packing list to see if the items received are complete. The actual pictures of the items are as follows (please refer to the actual shipment):

NO.	Name	Description	Quantity	Reference Picture	Note
1	Certificate of Conformity	/	1		
2	Expansion Bolt	M12*80	8		To fix the rack
3	Extension Rod	Suitable for 400~800A shell frame plastic shell type circuit breaker	1		Auxiliary turn on and off breaker
4	Cable Tie	White	10		
5	Ground Wire Terminal	SC50-8，for 50mm^2 cable	2		
6	Negative Quick-Connect Plug	ES103-03C70-1SYW-06，black，for 70mm^2 cable	2		

7	Positive Quick-Connect Plug	ES103-03C70-2SYX-06，orange，for 70mm^2 cable	2		
8	Maintenance Switch Plug	GCMSDP000，1500VDC，350A	1		
9	Auxiliary Power Supply Line	UL1015，14AWG（2mm^2），tube terminal EVN2510，L/N line，length 3m	2		48V fan power supply, one red and one black
		UL1015 16AWG（1.3mm^2），tube terminal EVN1510，L/N line，length 3m	2		24V power supply, one red and one black
10	Communication Line	Ultra Category 5 Shielded Cable，4PR，24AWG（0.2mm^2），twisted pair cable，length 3m	1		Network communication
11	Communication Line	UL 2517 20AWG (0.52mm^2), shielded twisted pair, length 3m	1		RS485 communication
12	Communication Line	UL 2517 20AWG (0.52mm^2), shielded twisted pair, length 3m	1		CAN communication

V. Installation and Wiring

5.1 Installation Requirement

5.1.1 Installation Environment Requirement

(1) Do not install in flammable, explosive, corrosive and other environments.

(2) Please avoid children's activity areas to avoid accidental contact or injury.

(3) As far as possible to avoid the sun, rain, snow and other extreme environments.

(4) The installation space should meet the ventilation and heat dissipation requirements of the equipment and operating space requirements (See Section 5.1.4 for details).

(5) The installation height should be easy to maintain, to ensure that the equipment labels, indicators are easy to view, and the terminals are easy to operate.

(6) Suitable for operation in an environment with an altitude of 3000m or less and a temperature of 0℃~55℃ (＞45℃ derating).

(7) Do not install in a strong magnetic field environment, as far as possible to avoid electromagnetic interference generated by the external environment.

(8) This is an indoor product, that needs to be installed in the house, in order to ensure better application of the product, it is recommended to install air-conditioning (power> 2kW) for auxiliary heating and cooling in the house.

5.1.2 Installation Carrier Requirement

(1) Do not mount the equipment to flammable materials. The mounting carrier must be fire-resistant.

(2) The mounting carrier must be reliable and sufficient to carry the weight of the equipment(⩾3t and ＞2500kg/m^2).

(3) There may be slight vibration during the operation of the equipment. Do not install the equipment

on a carrier with poor sound insulation, so as to prevent the noise of the equipment operation from affecting the people in the surrounding area.

5.1.3 Installation Angle Requirement

The equipment should be installed horizontally and vertically, not tilted or inverted.

5.1.4 Installation Space Requirement

When installing the equipment, please observe the following peripheral space reservation requirements while taking into account the footprint of the equipment. The top space should be reserved at least 500mm:

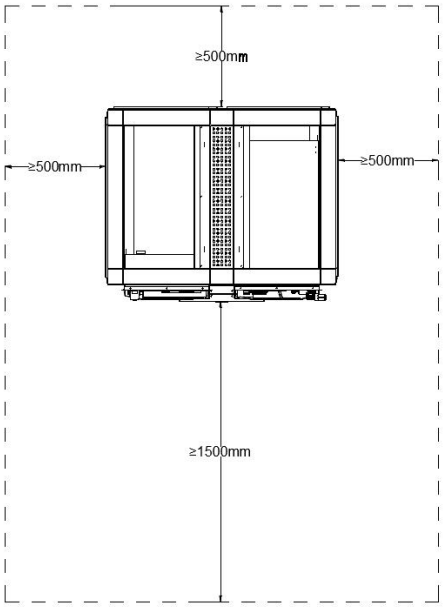

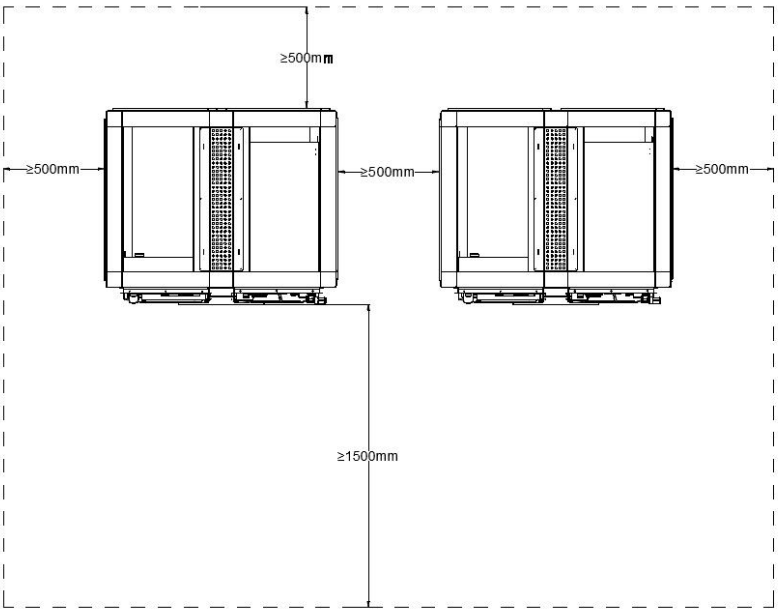

5.1.5 Installation Tool Requirement

（1）Protective Tool

Insulated Gloves	Work Protection Gloves	Safety Helmets	Insulated Shoes	Reflective Safety Jacket

Note: The above is for reference only and is inclusive and not limited to.

（2）Mounting Tool

	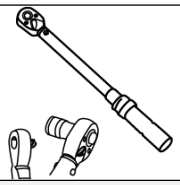	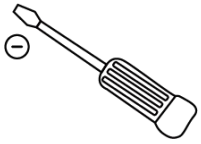	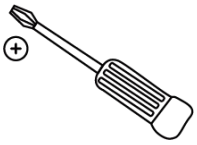
Forklift(≥3t)	Insulated Torque Wrench（10~50N•m）	Flathaed Screwdriver	Phillips Screwdriver
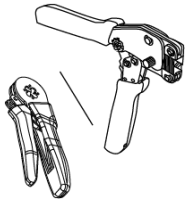	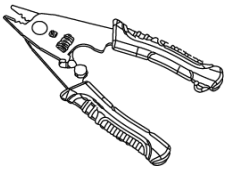	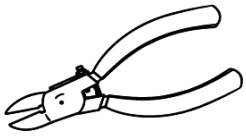	
Crimping Pliers（7”，hexagonal，0.25~6mm^2）	Wire Stripper（7”）	Wire Cutter（5”）	Rubber Hammer（50mm）
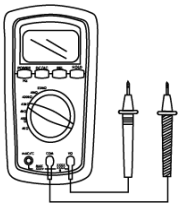	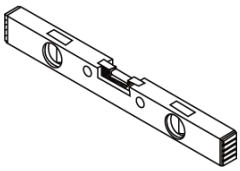	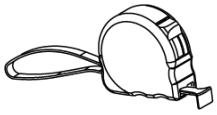	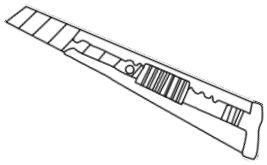
Multimeter（15B MAX-01，DC1000V）	Level Ruler（500mm）	Steel Tape Measure（5m）	Art Knife
	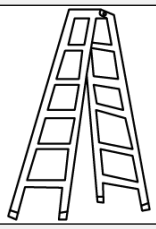	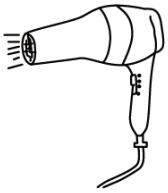	
Marker Pen	Insulated Ladder（＞2m）	Hot Air Dryer（1600W）	

Note: The above is for reference only and is inclusive and not limited to.

5.2 Mechanical Installation

5.2.1 Handling Equipment

A. Forklift Transportation Precautions

The bottom of the unit is equipped with fork holes designed for forklift transportation. Move the unit through the side fork holes.

If a forklift is used for transportation, the following requirements should be met:

- The forklift should be able to carry the weight of the device, the recommended forklift capacity is ⩾ 3t.
- The forklift should have appropriate leg lengths, and it is recommended that a test forklift be used prior to transportation.
- The equipment should be kept stable during the moving process, and should not be moved up and down or tilted too much.
- Lifting and lowering should be done gently, avoiding shock or vibration, and paying attention to the ground level when moving.
- Moving should be done by professional personnel, and they should participate in the whole operation command on site.
- Make sure the front and rear doors of the cabinet are locked before moving to avoid equipment damage or personnel injury.
- Take all necessary supporting measures to ensure the safe and smooth transportation of the electrical cabinet to the target location.

Using a forklift to move the product is the standard method of transportation. When handling, the center of gravity of the product should fall between the two forks of the forklift and be pre-inserted to ensure that it will not tilt after being fork lifted. The fork length of the forklift should not be less than 2.1m as shown in the diagram.

When using a forklift truck to fork lift, lower and move the product, it should be ensured that it is slow and smooth, and the cabinet must be placed on a firm and flat surface.

In the whole process of using forklift operation, the forklift safety operation specification must be strictly observed. Due to the large size of the product, so it may block the driver's vision, there

should be auxiliary personnel to cooperate.

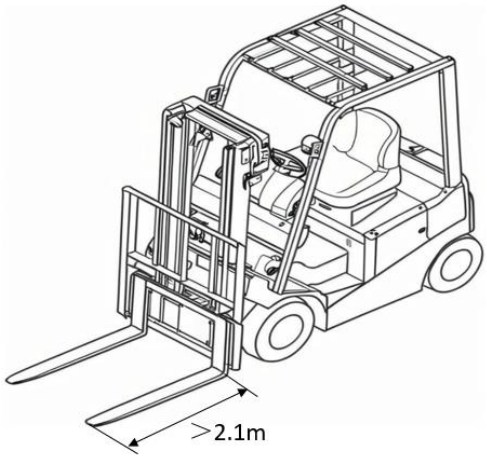

B. Precautions for transportation by pallet

Moving the equipment by pallet is only applicable when the transportation route is relatively flat. When the equipment is moved, its center of gravity should fall between the two forks of the pallet truck and be pre-inserted to ensure that it will not tilt after the fork lift. As shown in the figure, the length of the fork of the pallet truck shall not be less than 1.5m, the two fork arms of the pallet truck, the distance between the outer sides shall not be more than 0.7m, and the load-bearing capacity of the pallet forklift truck shall be more than3t.

The use of pallet truck forks up, down and moving the equipment, should ensure that slow and smooth, the equipment must be placed on a solid and flat ground.

In the whole process of using pallet truck operation, the relevant safety operation specification must be strictly adhered to. Due to the large size of the equipment, the operator's vision may be obscured, and should be accompanied by auxiliary personnel.

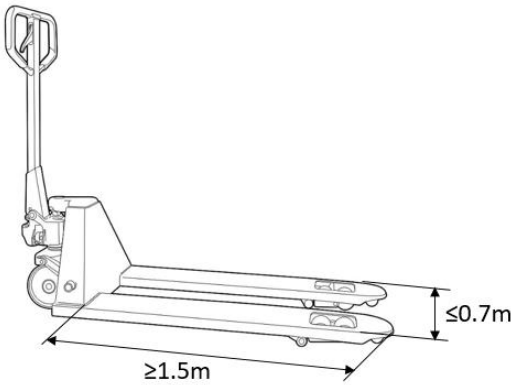

5.2.2 Fixed Equipment

The indoor product is installed in the room, must ensure that the ground is flat and solid, safe and reliable, and has sufficient bearing capacity (not less than 3t and >2500kg/m^2).

Use M12*80 expansion screws to fix with the floor, there are a total of 8 positions, recommended torque 60N•m. The following figure:

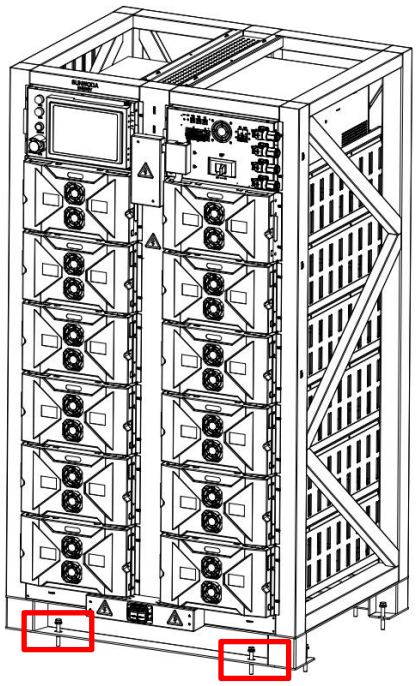

Figure 5.2.2.1 Expansion bolt fixing drawing

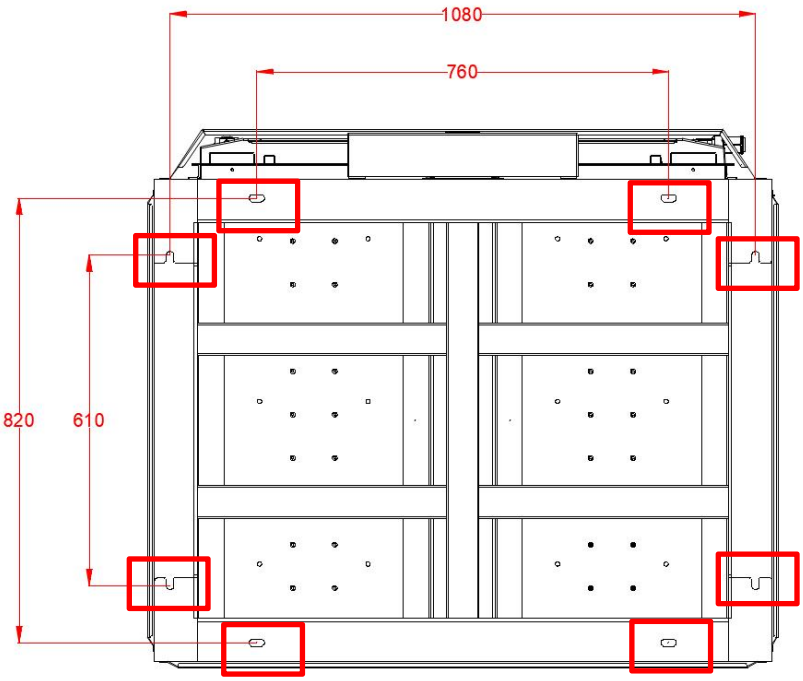

Figure 5.2.2.2 Layout of expansion bolts at the bottom of the rack

5.3 Electrical Wiring

5.3.1 Wiring Precautions

⚠When connecting the wires, please make sure to complete them in order according to the contents of the manual, the ground connection must be completed first, and all the wiring work must be carried out in a no-voltage state. Before connecting the electrical cables, please make sure that the control box air switch, miniature circuit breaker and all higher level switches are disconnected.

5.3.2 Wire Harness Specification

NO.	Wire Harness Name	Recommended wire harness specification (minimum cross-sectional area)	Terminal Specification	Note
1	Battery to PCS power line (P+/P- line)	70mm^2，current carrying capacity ≥ 350A	70mm^2 connector terminal (battery side)	Cables to be provided by the customer
2	230V auxiliary power supply line (L/N line)	UL1015 14AWG（2mm^2），current carrying capacity ≥ 9.5A	Tube Terminal EVN2510	The standard length is 3m, if the length is not enough, customers should match their own on site
		UL1015 16AWG（1.3mm^2），current carrying capacity ≥ 6A	Tube Terminal EVN1510	
3	Ground wire	50mm^2，current carrying capacity ≥ 270A	SC50-8 Tin-Plated Red Copper, for 50mm^2 Cable	Cables to be provided by the customer
4	Communication lines with higher-level EMS	Ultra Category 5 Shielded Cable, 4PR, 24AWG（0.2mm^2），Twisted pair cable	Tube terminal EVN0310 on one end, network port terminal 8P8C crystal head on the other end	The standard length is 3m, if the length is not enough, customers should match their own on site
5	Communication line with PCS	UL 2517 20AWG（0.52mm^2），Shielded Twisted Pair	Tube Terminal EVN0512	The standard length is 3m, if the length is not enough, customers should match their own on site

Note: Cable specifications should be selected in accordance with local cable standards. Factors affecting the selection of cables include: rated current, cable type, laying method, maximum expected line loss, rated temperature, ambient temperature, temperature resistance, acidity,

settlement, environmental protection requirements and so on.

Screw Specification	Recommended Torque
M6	5±10%N • m
M8	12±10%N • m
M10	26±10%N • m

5.3.3 Ground Line Connection

The system's internal ground wire is connected at the time of shipment; the system's external ground wire must be connected manually on-site. Please refer to the local regulations to connect the external ground wire before wiring. Take out the ground wire (provided by the customer, wire diameter not less than 50mm^2), requires crimping of cable with supplied round bare terminal SC50-8, use M6*14 screws to crimp one end to the outside of the rack, the specific crimping position see the following figure. The ground wire can be connected in series when paralleling the machine.

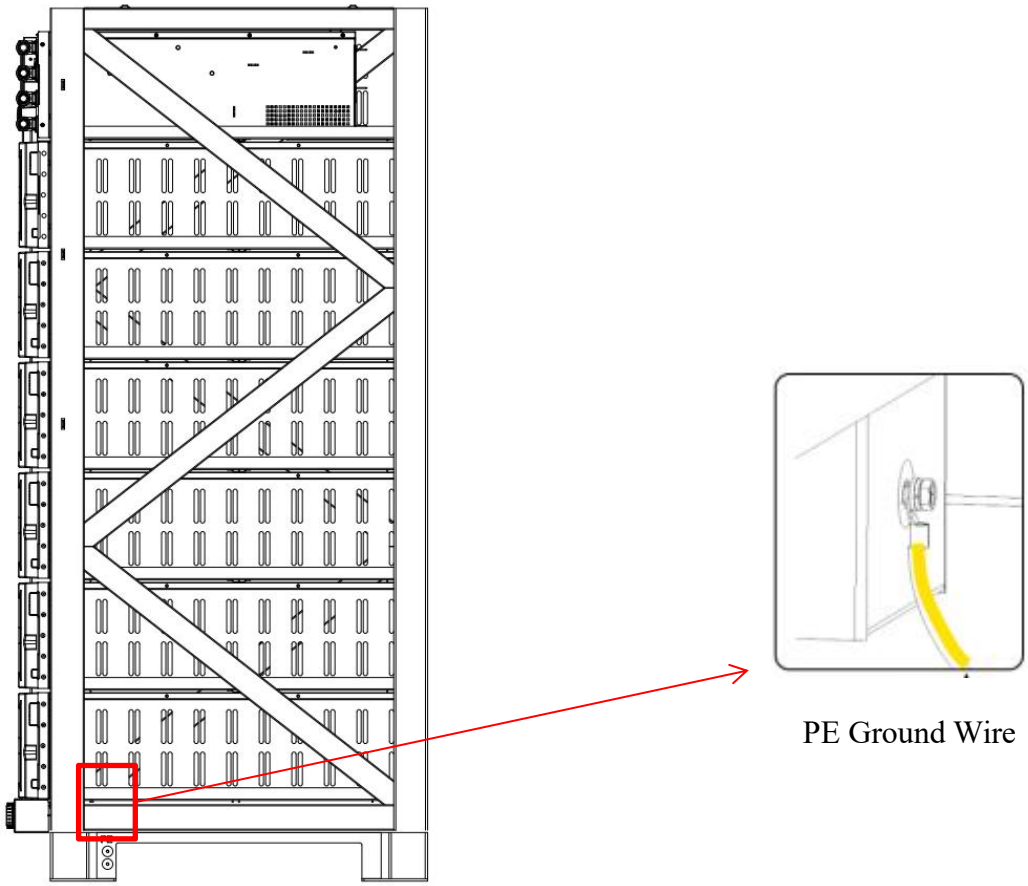

5.3.4 Power Line Connection

The power line connected to the external PCS (provided by the customer) is mainly connected to the high-voltage box through the quick-plug terminals, leading the power line to the high-voltage box

P+/P- connection base, please do not connect the wrong one: please strictly distinguish between positive and negative poles. Positive and negative harness wire diameter is not less than 70mm^2, please confirm the harness quick-insert terminals and high pressure box chassis match: high pressure box P+ socket model for Sanco ES103-01M8-2SYX-07X key position orange, high pressure box P- socket model for Sanco ES103-01M8-1SYW-07W key position black; such as the use of 70mm^2 cable, the P+ harness need to be used Sanco ES103-03C70-2SYX-06(Orange) terminal for P- and Sanco ES103-03C70-1SYW-06(Black) terminal for P- to match with P+ and P- base of HV box.

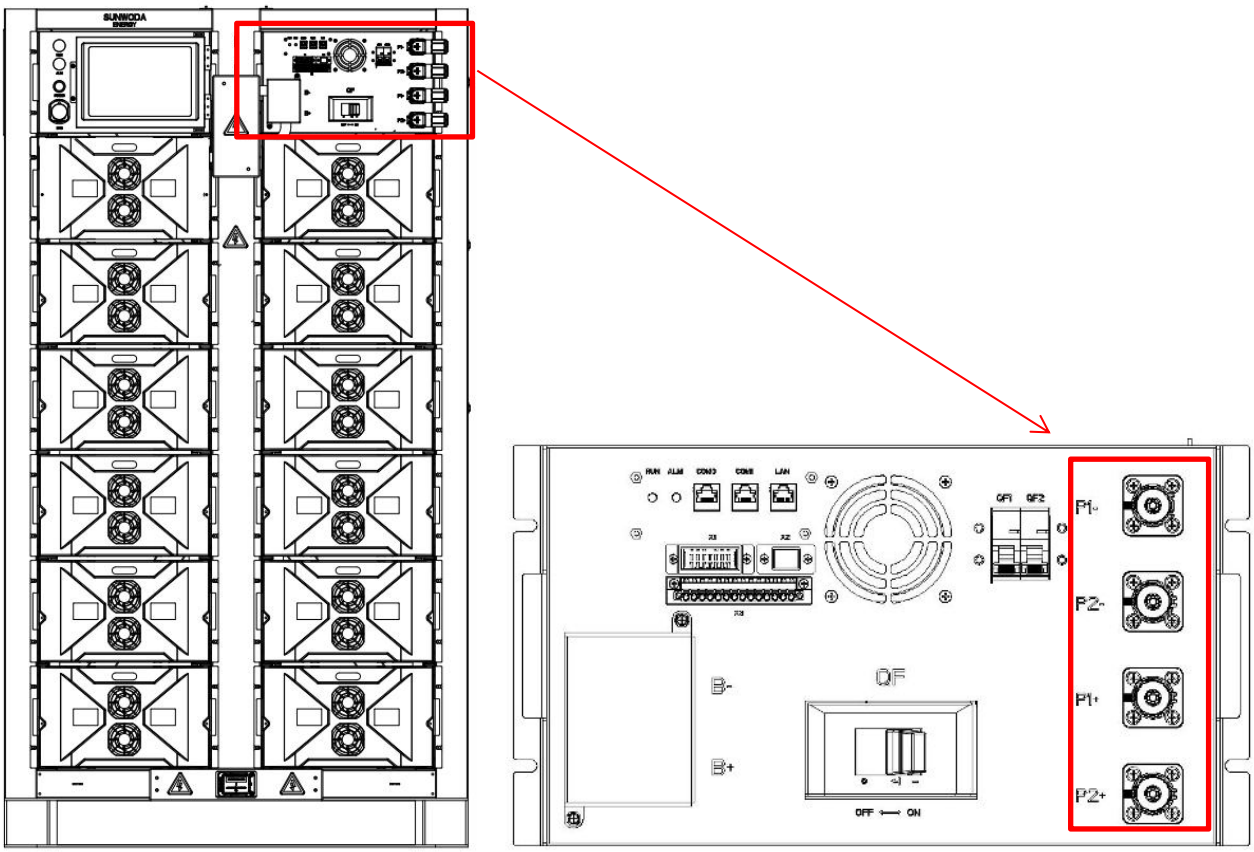

Note: For single machine use, select P1+/P1- to connect externally, and P2+/P2- for multiple parallel machines.

5.3.5 The Auxiliary Power Supply Line Connection

The internal power supply line of the system has been connected at shipment. The external auxiliary power supply line (L/N line) of the system, one end connected to 230V mains power or AC 230V UPS, power ≮1kW, one end connected to high voltage box X3 terminals 11, 12 (16AWG, 24V power supply) and 13, 14 (14AWG) (48V fan power supply) PIN position, location as shown in the following figure.

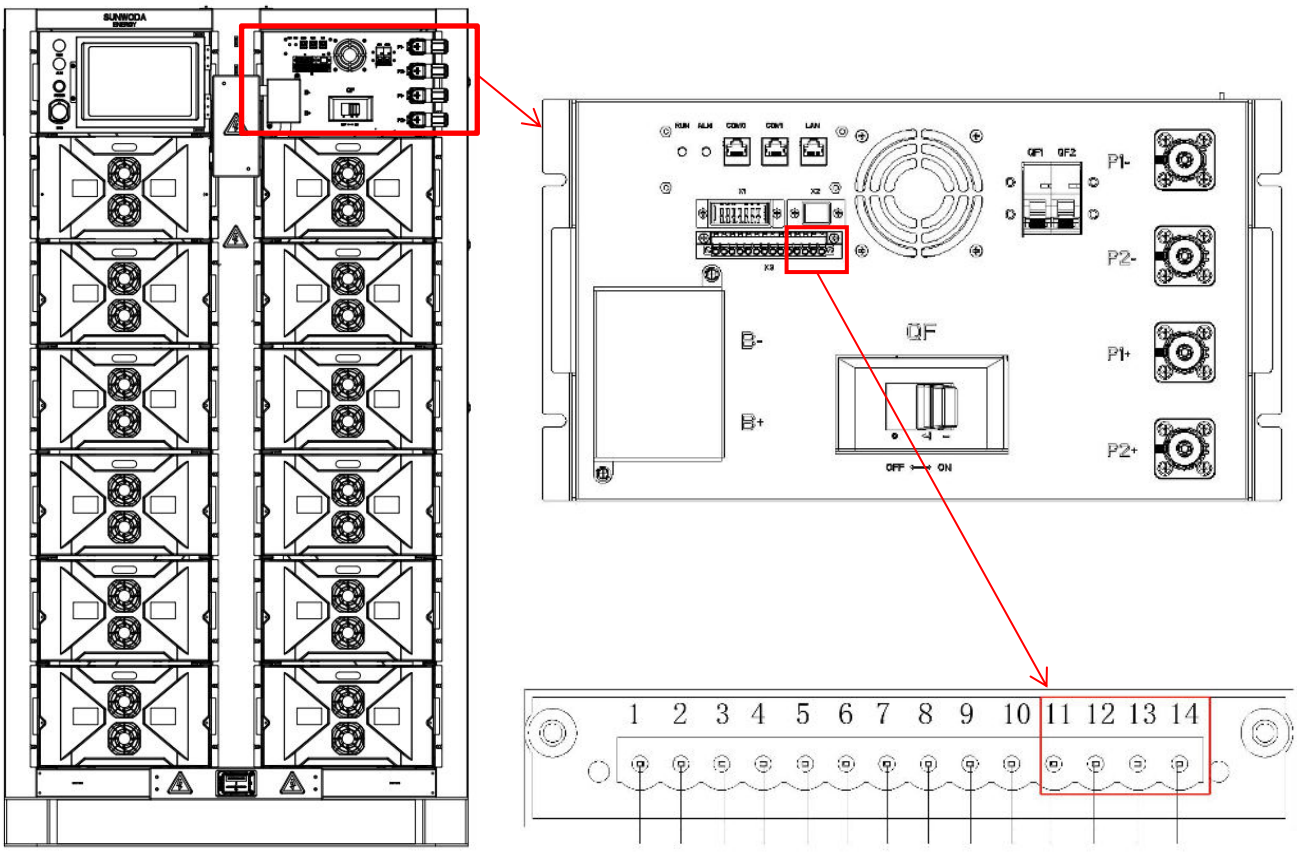

5.3.6 Communication Line Connection

The internal communication lines of the system have been connected at the time of shipment. The external communication lines of the system (the required wiring harness specifications are detailed in Section 5.3.2) can be connected to the RS485 communication or network port end of the product LCU as needed. The connection port is at the bottom of the LCU. The position is shown in the following figure.

Before wiring, you can first unscrew the two M4 fixing screws in front of the screen. After connecting the wires, unscrew them back to fix them.

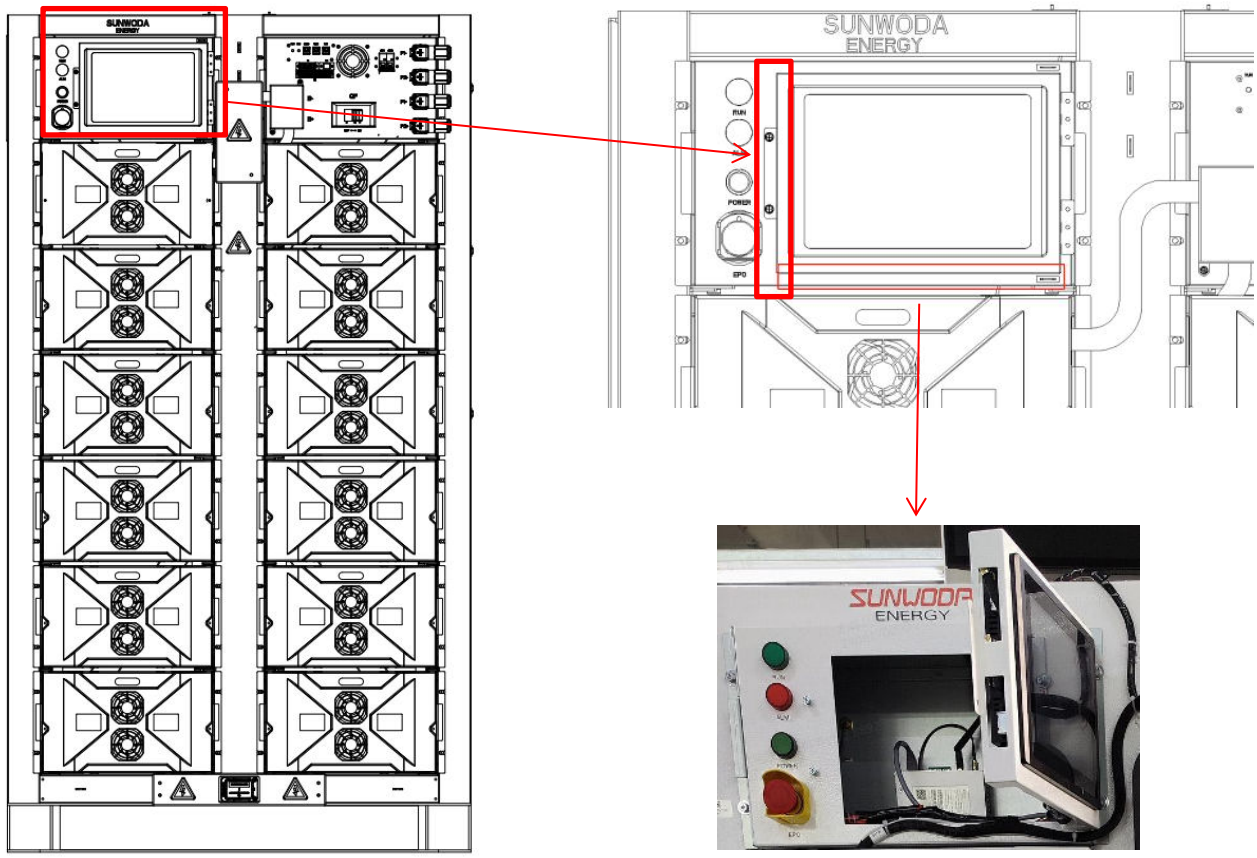

Figure 5.3.6.1 Open the back of the touchscreen for wiring connections

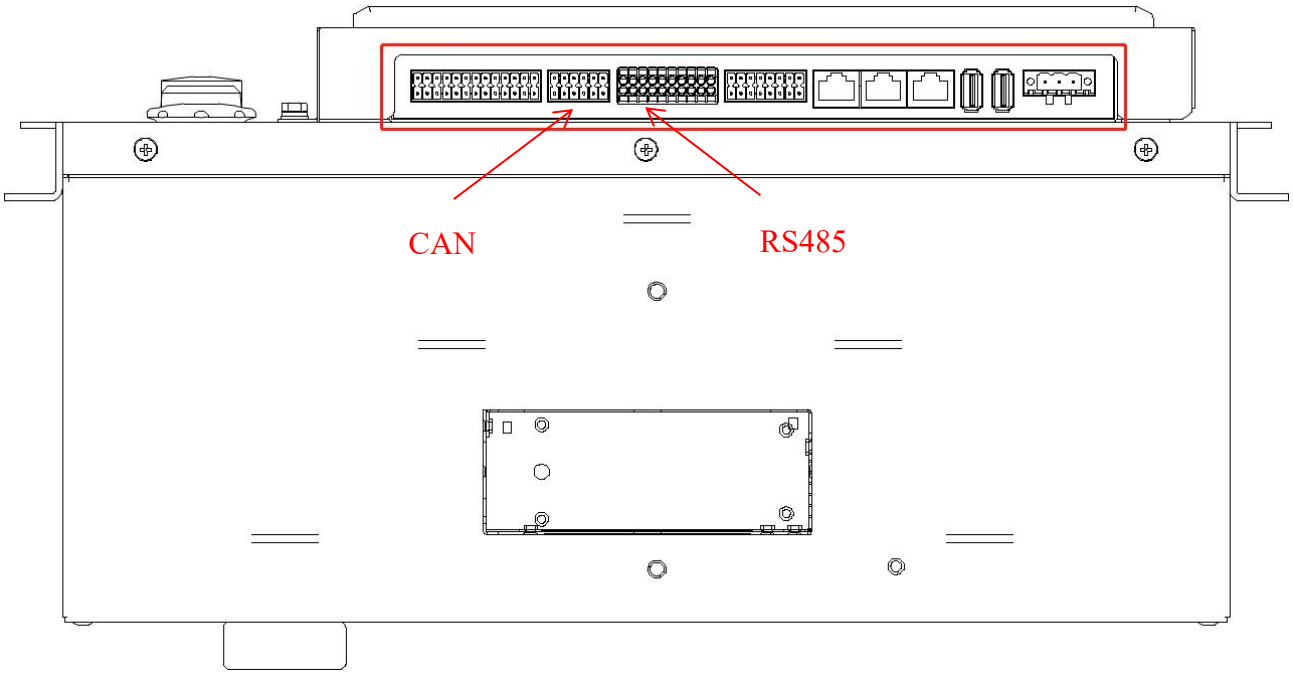

Figure 5.3.6.2 Schematic diagram of the terminal block at the bottom of the touchscreen

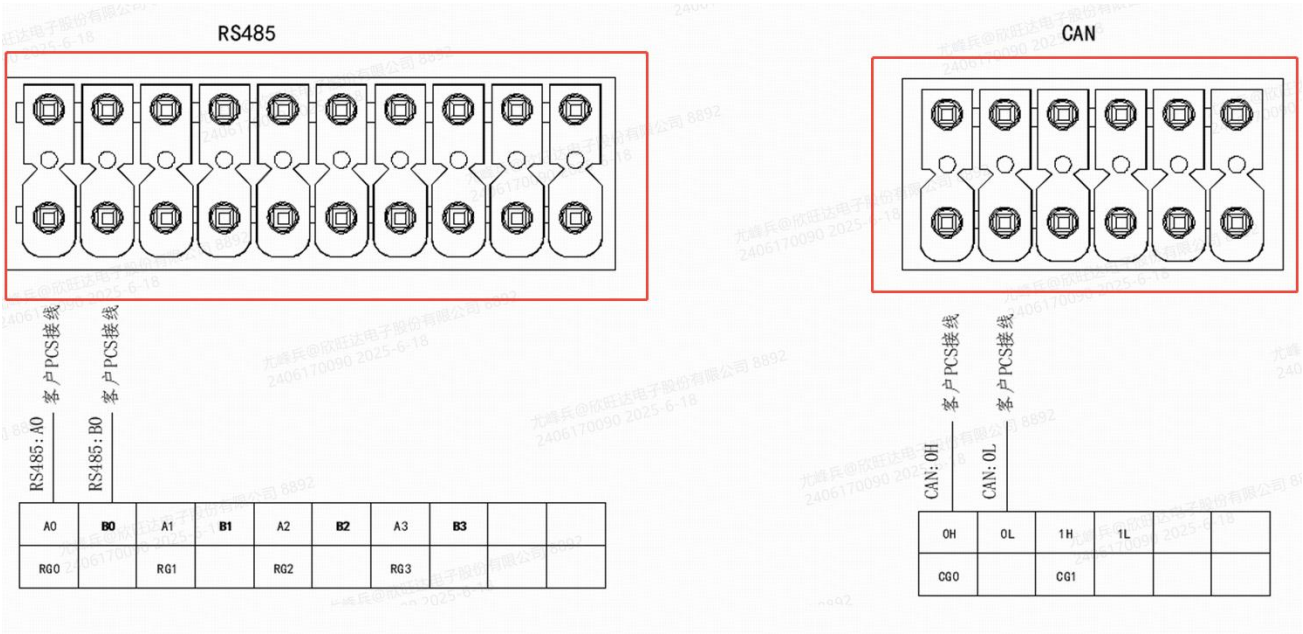

CAN communication mode connects to 0H and 0L terminal rows; RS485 communication mode connects to A0 and B0 terminal rows.

5.3.7 Local Emergency Stop External Connection (Optional)

According to the installation requirements at the customer's site, if it is necessary to connect the emergency stop function on the equipment body to the remote control system at the customer's site and enable remote emergency stop control, the wiring can be illustrated as shown in the following figure.

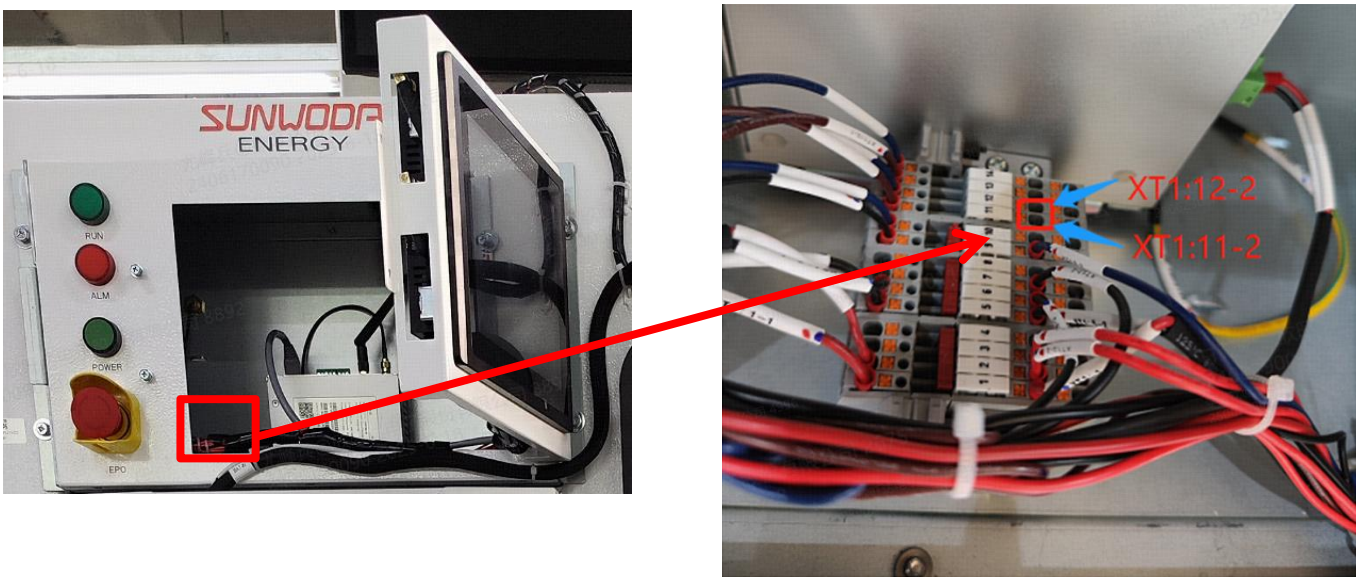

(1) Disassemble the rack LCU box, first unscrew the two fixed M4 screws in front of the screen.

(2) Open the door of the box, find the 11-2 and 12-2 serial numbers of the terminal block XT1, and

remove the connecting wires between them.

(3) Connect the two EPO remote cables (provided by the customer) to 11-2 and 12-2 of XT1 respectively, pull and pull hard to confirm the reliable connection after connecting the cables.

(4) Close the door of the box, and finally screw back the two M4 screws fixing the screen.

Note:

(1) Remote control must be connected externally with passive dry contact and normally closed contact, not with power supply, otherwise it will burn the LCU screen (LCU comes with 5V power supply) and cause system failure.

(2) Recommended harness specification: UL10269 22AWG (0.33mm²).

5.3.8 Parallel Wiring (if required)

According to the requirements of the customer's project, when multiple products are paralleled, the wiring method is shown in the following figure (this product supports a maximum of 12 parallel units).

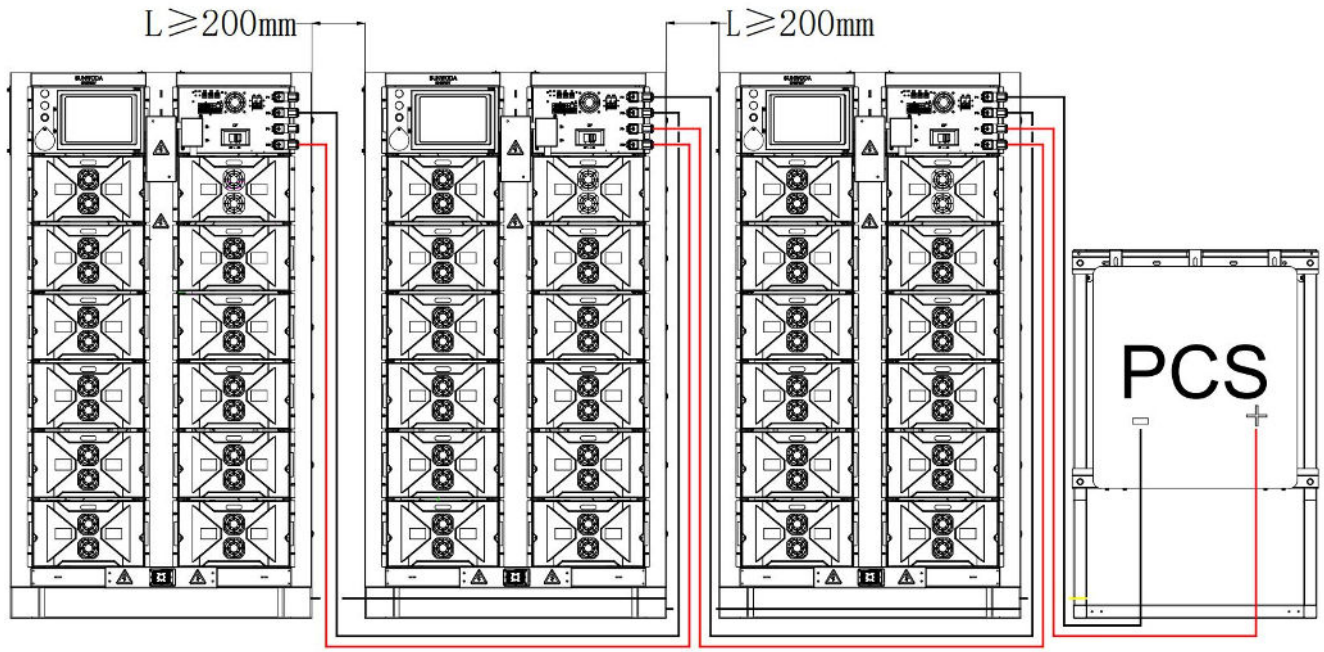

The details of the parallel wiring are as shown in the enlarged figure below. Any group of P+/P- of the first device is connected to P2+/P2- of the second device, and then P1+/P1- of the second device is connected to P2+/P2- of the third device, and so on. The last device or the remaining group of P+/P- of the first device can be selected to be connected to the PCS externally.

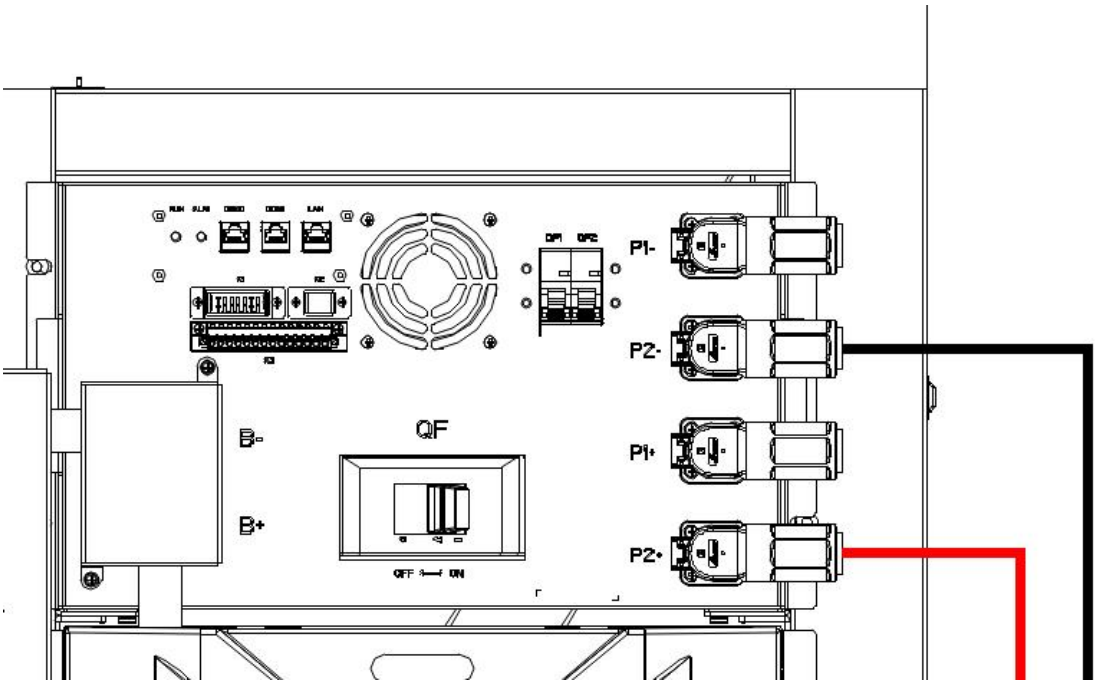

Enlarge Image 1

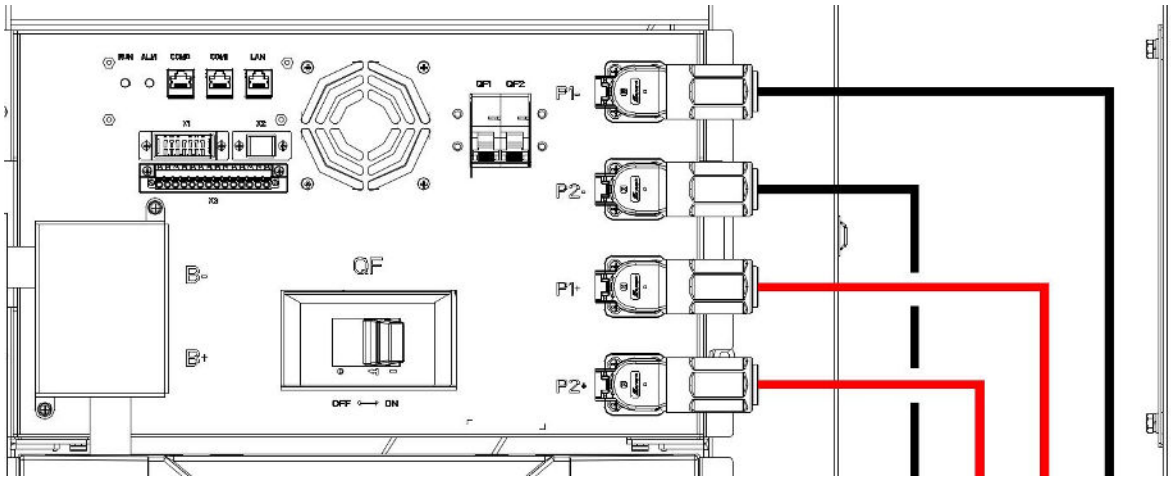

Enlarge Image 2

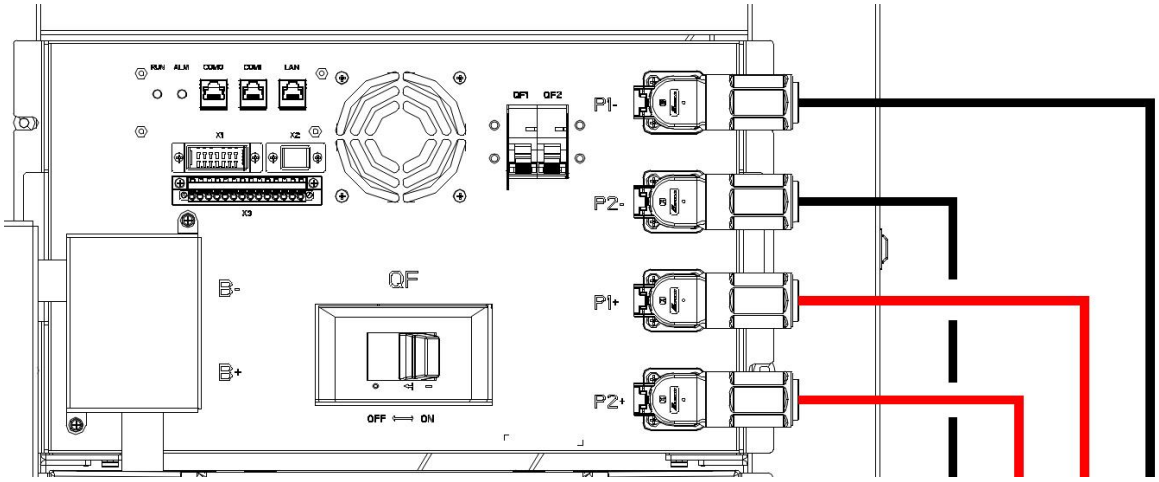

Enlarge Image 3

5.4 Installation Inspection

5.4.1 Electrical Inspection

(1) Ground wire connection is complete. Connection is with tight and secure, with no leakage, or wrong connection.

(2) Power line connection is complete. Connect firmly and securely, without polarity reversal, leakage, wrong port and other phenomena.

(3) The communication line is connected correctly. Connection is tight and reliable, no leakage, wrong connection.

(4) The cables meet the principle of separation of strong and weak power, and the alignment is straight and smooth, without crossing.

(5) All cables are not damaged or cracked, reasonably distributed, with appropriate margins at the turns.

(6) Check the value of grounding resistance ($<4\Omega$) and make sure that the ground wire is well connected to the ground network.

5.4.2 Structural Inspection

(1) The equipment is well installed and free from breakage, rust and paint loss. If so, please refill the paint in time.

(2) Equipment label is clearly visible. If it is broken, please replace it in time.

(3) The equipment is firmly and stably installed, and the surrounding space meets the requirements.

(4) The equipment surrounding is clean and tidy, and there are no construction leftovers inside the equipment.

(5) The protective cover and baffle plate removed during wiring have been re-installed, and there is no missing installation.

VI. Equipment Operation

6.1 Indicator Light Introduction

6.1.1 Rack Indicator Light

NO.	ALM	RUN	Note
1	OFF	Flickering	The system is powered on for self-check
2	OFF	Always on	The system is operating normally.
3	Always on	OFF	The system is faulty (unable to operate).
4	Always on	Ever Bright	System debugging mode

6.1.2 Control Box Indicator Light

NO.	ALM	RUN	Note
1	OFF	Flickering	The battery cluster is powered on for self-check
2	OFF	Always on	The battery cluster is operating normally
3	Always on	OFF	The battery cluster is faulty (unable to operate).

6.2 Operation Guidance

6.2.1 Pre-operation Inspection

1) Before proceeding to the next step of powering up the equipment, please read carefully "II. Safety Statement" of this manual and make a detailed inspection.

2) When operating or maintaining the internal metal parts of the equipment, the voltage to the enclosure (protective ground) must be checked with a high-voltage tester or other instrument to prevent electric shock.

After the installation of the equipment is completed, you need to check the following contents carefully and item by item before applying the power:

1. Please read "II. Safety Statement" carefully.
2. Confirm that the equipment is not damaged, scratches and other signs.

3. To confirm that the equipment cabinet, and rack tops are without leaving foreign objects.

4. Confirm that there is enough space around the equipment for maintenance and operation.

5. To confirm that there are no explosive, flammable materials around the equipment.

6. Confirm that the system input switch in the field is disconnected, and all the power wiring is correct, all the communication line cable connections are correct.

7. Confirm that the equipment has been well grounded.

8. Confirm that the equipment has been set up around the isolation zone and warning signs to prevent others from misuse or closing.

6.2.2 Power-up Procedure

1、Lock the MSD maintenance switch of the DC circuit.

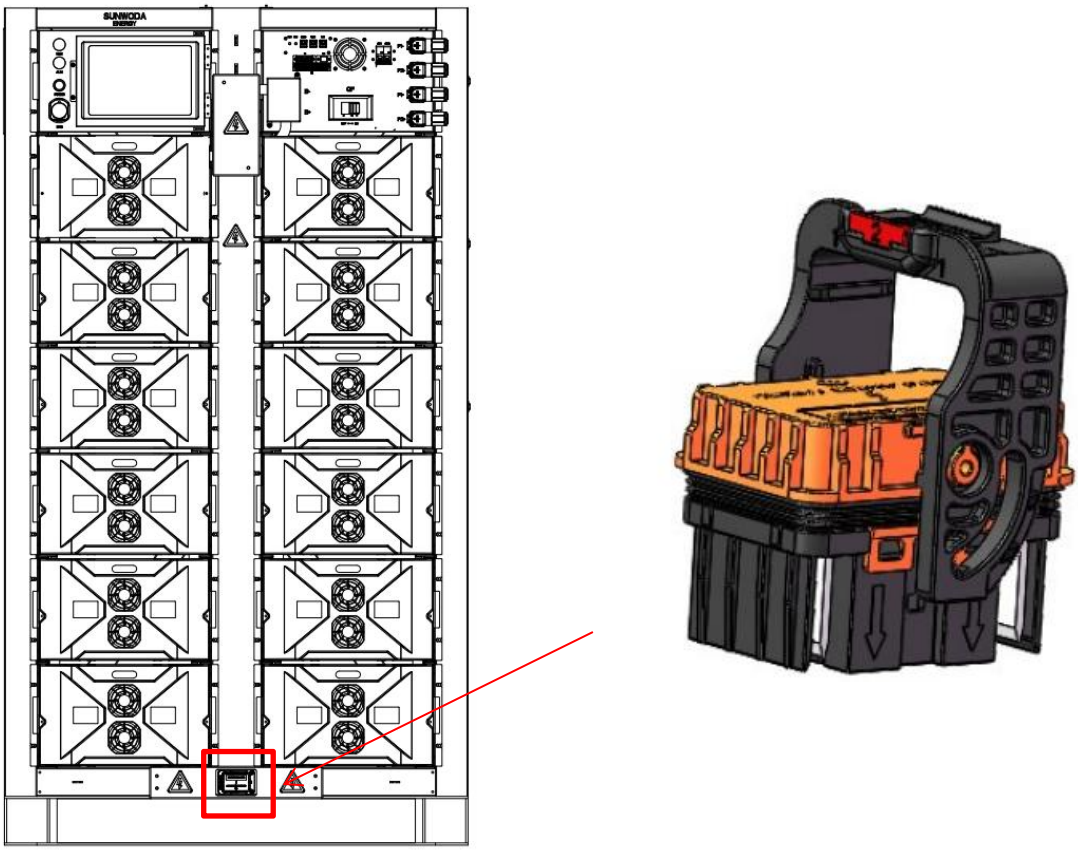

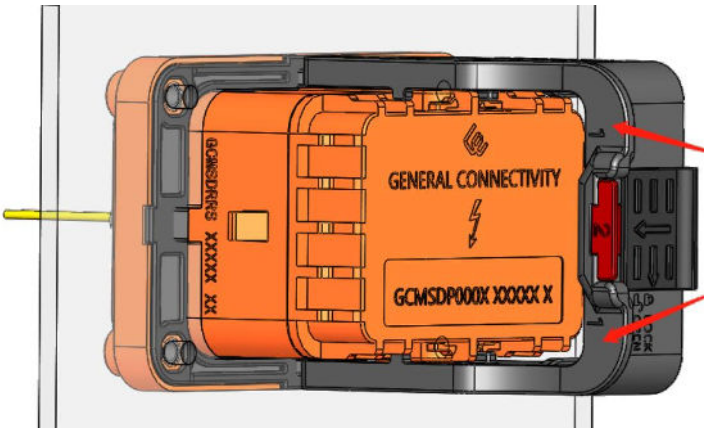

The MSD plug and socket are mutually matched. When the CPA is on, press the "1" position of the MSD handle simultaneously. When you hear a "click", the handle will be fully locked.

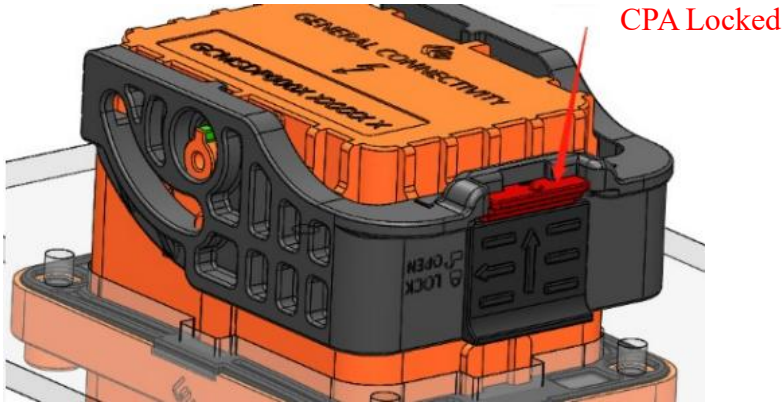

After the handle is fully locked, press MSD CPA down. Push CPA until it is flat on the unlocking slider to achieve the secondary locking effect of MSD CPA.

2、Close the circuit breakers QF, QF1 and QF2 of the high-voltage control box. Close PCS battery side switch (if available).

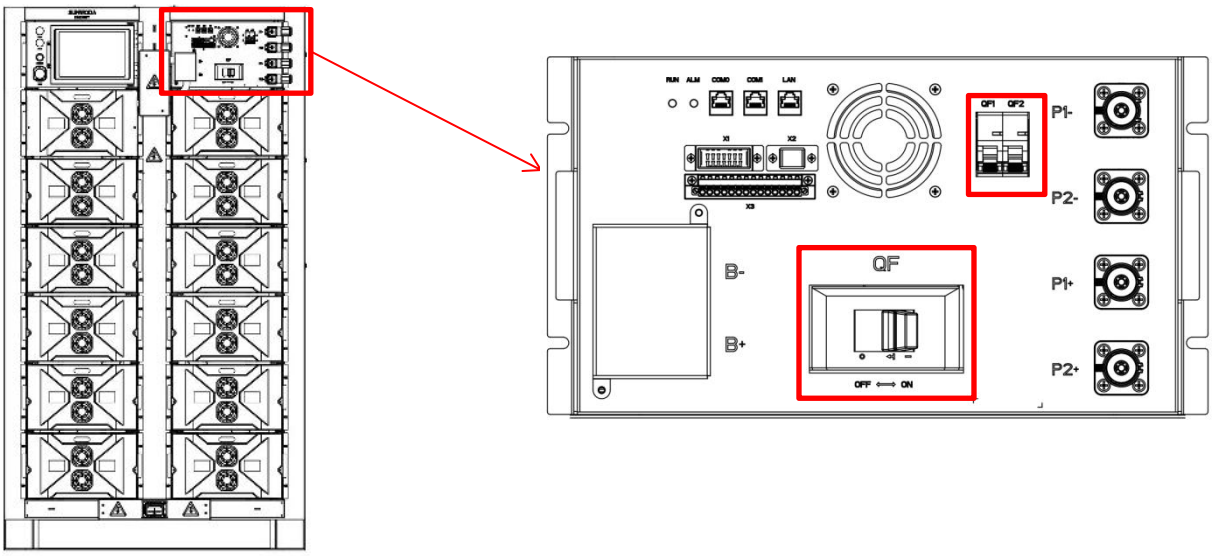

3、Press and hold the POWER button for 3 seconds. The DC side will be powered on, and the RUN indicator lights on the control box and the cabinet will display green. Power-on on the DC side has been completed.

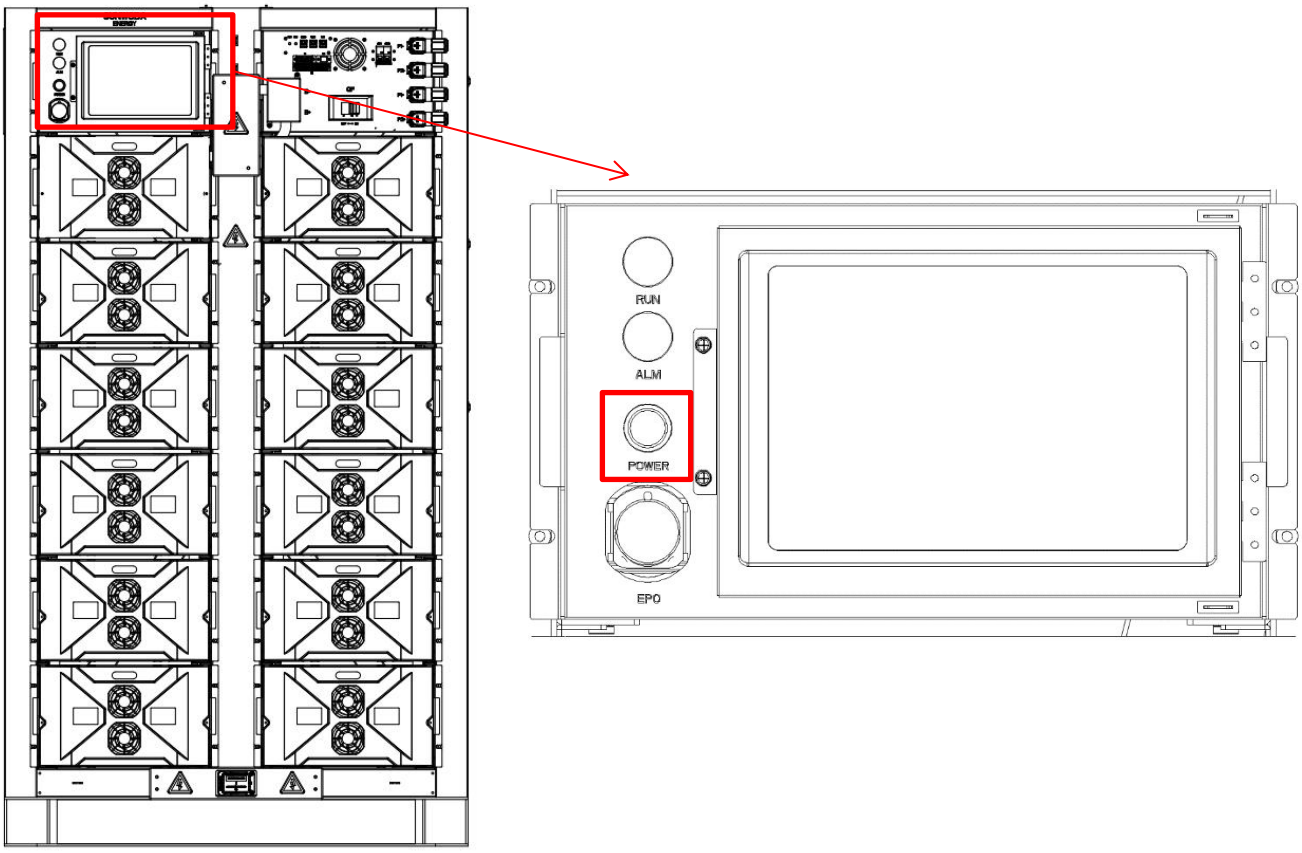

4、User external PCS to this battery system, after checking the wiring is correct, close the external power grid protection switch, and the system carries out the grid-connected operation mode.

5、After logging into the local EMS account and password, enter the user operation interface, where the current system status can be displayed normally and the operation mode can be set (the account and initial login password have been pasted above the touch screen).

6.2.3 Turn off the Power

(1) Shutdown step

Set the device to shut down using the HMI screen.

Hint:

This shutdown mode only turns off the operation of power devices in the system. The machine is in standby mode, and the output terminals remain powered.

(2) Power-off step

Step1: Power off the AC grid: Disconnect the external power grid protection switch.Disconnect the DC side switch of the PCS (if any).

Step2: DC POWER supply shutdown: Press and hold the POWER button for 3 seconds. The DC side control unit will shut down and the DC contactor will disconnect.

Step3: Disconnect the DC circuit: Disconnect the circuit breakers QF, QF1, and QF2 in the high-voltage control box.

Note: During maintenance, after power-off is completed and the maintenance switch is turned off, the partition on the maintenance switch needs to be removed first.

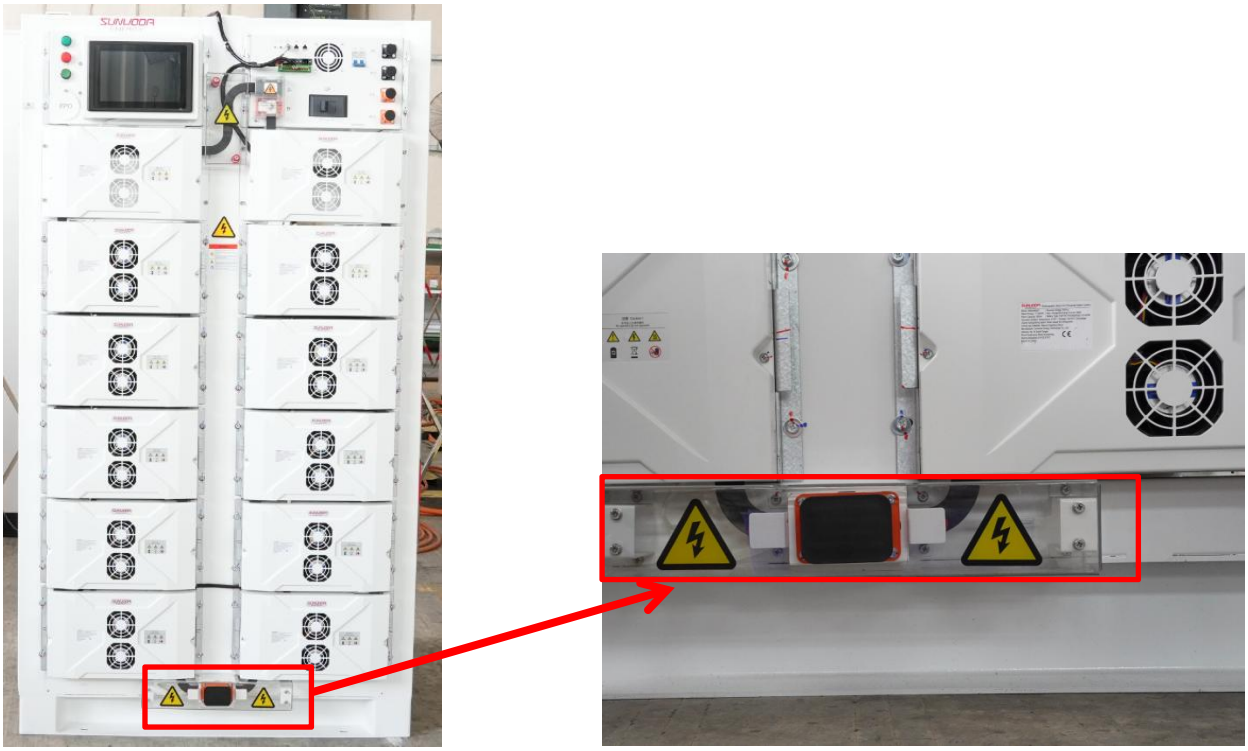

6.2.4 Emergency Shutdown

In case of an emergency, pressing the emergency stop button on the rack will immediately cut off the primary circuit inside the product and stop the charging and discharging path.

VII. Maintenance Guidance

7.1 Maintenance Precautions

1) Before maintenance, it is necessary to use high-voltage testers or other instruments to test the metal parts that need to be touched or may be touched to avoid electric shock.

2) During maintenance, please pay attention to the warning labels inside the equipment to prevent personal injury caused by high-temperature, overweight and other components.

3) Maintenance must be carried out when the system is shut down and not energized, and the following steps should be followed:
Shut down the equipment.
② Disconnect all external power sources.
③ Confirm that the pre-stage switch has been disconnected and the grounding knife switch is properly connected.
After maintenance, all screws need to be tightened to the required torque.

4) The model of the new device replaced must be consistent with the original one. If you have any questions, please contact Sunwoda.

5) Daily inspections of the equipment can be carried out by personnel who have received relevant training, and the inspection and replacement of its components should be operated by authorized professionals.

6) The components behind the protective cover plate that can only be opened with tools are not accessible to users. Only qualified maintenance personnel are allowed to open such protective cover plates.

7.2 Maintenance Content

Due to the influence of factors such as humidity, temperature, dust and vibration in the operating environment, the internal components of energy storage systems that have been in use for a long time may experience varying degrees of aging or performance degradation. After the equipment is put into use, please be sure to inspect it regularly. The inspection items are as follows:

Inspect the Component	Inspection Content	Inspection Cycle
LCU Touch screen	① Check whether there are any fault alarm messages in the interface that have not been processed	Once a week
	② Check whether there are any changes in the parameter Settings of the interface	Once a month
	③ Check the operation data of the system and export and save it to relevant files (including operation logs)	Once a month
	④ Check whether the start-stop control function of the interface is operating normally	Once six month
	⑤ Check whether the resolution status of the interface has decreased or shown any abnormalities	Once a year
Rack and mounted equipment Note: For any operation that requires touching the rack, please make sure to power off the product and wait for 15 minutes before proceeding	① Check whether the operating noise of the product is too loud or there are any abnormal sounds	Once three month
	② Check whether the outer wall of the rack has abnormal temperature	Once three month
	③ Check the surrounding environment of the rack for any accumulated water, dirt, heat sources or other items, and remove them in time	Once a month
	④ Check whether there is excessive dust or objects covering the air intake and ventilation ports of the rack and the top of the rack	Once six month
	⑤ Check whether the rack shell and its supporting components show signs of rust, oxidation, damage, paint peeling, shaking, etc.	Once a year
Wiring harnesses and terminal blocks Note: Please be sure to power off the system and wait for 15 minutes before conducting any relevant inspection operations	① Check whether the power, communication and ground wire connections are loose	Once a year
	② Check whether the insulating skin of the power, communication and ground wires is damaged	Once a year
	③ Check whether the insulating winding tape of the power line is damaged	Once a year
	④ Check whether the terminal blocks or copper bars are loose or have rust or oxidation	Once a year
Cooling fan	① Check if there is any dust accumulation at the heat dissipation vents and clean it in time	Once a year
	② Check if there is any dust accumulation on the cooling fan and clean it in time	Once six month
	③ Check whether the operation of the cooling fan makes any abnormal sounds	Once a year

VIII. Fault Handling

NO.	Report Unit	Fault Description	Possible Reason	Solution
1	EMS	The PCS communication is disconnected	The communication line connection is abnormal, or the LCU communication parameters are configured incorrectly	Check the communication line between the LCU and the PCS
2	EMS	The BMS communication is disconnected	The communication line connection is abnormal, or the LCU communication parameters are configured incorrectly	Check the communication line between the LCU and the BMS
3	EMS	Hardware shutdown trigger	The emergency stop switch is disconnected	Reset the emergency stop switch
4	EMS	The maintenance switch is pulled out.	The maintenance switch is not installed	Power down the system and install a maintenance switch
5	BMS	There is severe overcurrent during charging	Abnormal current sampling	Please contact the manufacturer
6	BMS	There is severe overcurrent during discharging	Abnormal current sampling	Please contact the manufacturer
7	BMS	The battery is severely overvoltage	Abnormal voltage sampling	Please contact the manufacturer
8	BMS	The battery is severely undervoltage	Abnormal voltage sampling or the battery has not been charged for a long time	Please contact the manufacturer
9	BMS	The battery is severely overtemperature	The power switch for the fan is not closed	Close the power switch of the fan
10	BMS	The battery is severely undertemperature	The power switch for the fan is not closed	Close the power switch of the fan
11	BMS	Abnormal high-voltage sampling	The DC circuit breaker of the high-voltage box is not closed	Close the DC circuit breaker of the high-voltage box
12	BMS	The temperature of the main control box is abnormal	The power supply switch for the high-voltage box fan is not closed, or the power supply switch for the cabinet fan is not closed	Close the power supply switch of the fan

Sunwoda Energy Technology Co., Ltd
Sunwoda Industrial Park, No.18 Tangjia South Road, Guangming New District, Shenzhen, China
www.sunwodaenergy.com

Version: 20250703-V1 SUNWODA All rights reserved. Subject to change without notice.